MOTOR | FAHRWERK | SERVICE

KOMPETENZ IN PKW-PARTS

NOCKENWELLEN UND REPARATURSÄTZE CAMSHAFTS AND KITS

2010/2011

TÜV DIN EN ISO 9001

RUVILLE

YOUR PARTNER

EINZELTEILE UND ÜBERSETZUNGEN

Nockenwellenverstellsysteme 20 ...	variable camshaft timing system systèmes de déphasage d'arbre à cames sistemas de regulación del árbol de levas sistemi di regolazione dell'albero a camme Системы регулирования фаз газораспределения	System zmiennych faz rozrządu Systém nastavení vačkové hřídele szelepvezérlés állító rendszer Συστήματα ρύθμισης εκκεντροφόρου άξονα Eksantrik mili ayar sistemleri
Nockenwelle 21 ...	camshaft abre à cames arbol de levas albero a camme Распределительный вал	wałek rozrządu Vačková hřídel vezérműtengely Εκκεντροφόρος άξονας Eksantrik mili
Nockenwellen-Vollsatz 22 ...	camshaft set jeu d'abre à cames arbol de levas albero a camme serie completa Полный комплект распределительных валов	wałek rozrządu - kompletny zestaw Vačková hřídel - velká sada vezérműtengely teljes készlet Πλήρες σετ εκκεντροφόρου άξονα Eksantrik mili komple seti
Nockenwellen-Kurzsatz 22 ...	camshaft set (small set) jeu d'abre à cames (jeu réduit) arbol de levas (kit reducido) albero a camme piccola serie Укороченный комплект распределительных валов	wałek rozrządu - mały zestaw Vačková hřídel - malá sada vezérműtengely készlet (szükitett készlet) Μικρό σετ εκκεντροφόρου άξονα Eksantrik mili yarı komple seti
Schlepphebel 23 ...	cam follower cullbuteur flottant balancín flotante bilanciere a trazione Балансир	dźwigienka zaworowa zdvihátko ventilu szelephimba Ζυγός Kam izleyicisi
Kipphebel 24 ...	rocker arm culbuteur balancín bilanciere Коромысло	dźwigienka zaworowa - uchylna vahadlo szelephimbatengely Βραχίονας αλλαγής κατεύθυνσης Külbütör manivelası
Kipphebelwelle/Achse 25 ...	rocker shaft axe de culbuteur eje de bilancín albero bilanciere Ось коромысла	wałek dźwigienek zaworowych hřídel vahadla himbatengely Άξονας βραχίονα αλλαγής κατεύθυνσης/άξονας Külbütör manivelası mili/Dingil
Mechanische Stößel 26 ...	tappet poussoir empujador de válvula punteria Механический толкатель	popychacz Mechanický ventil szeleptöke Μηχανικοί πείροι Mekanik sübap iticisi
Hydrostößel 26 ...	hydraulic lifter possoir hydraulique taqué hidraulico punteria idraulica Гидрокомпенсатор	popychacz hydrauliczny Hydraulický ventil hidraulikus szeleptöke Υδραυλικός πείρος Hidrolik sübap iticisi
Druckstücke 27 ...	thrust pad pastille placa de presión tassello di spinta Упор	element dociskowy tlačný díl nyomódorab Τεμάχια πίεσης Basınç parçaları
Einstellscheibe 28 ...	adjuster shim disque d'ajustage disco ajustado rosetta Установочный диск	podkładka regulująca vymezovací podložka béallító lapka Δίσκος ρύθμισης Ayar diski
Wellendichtung 29 ...	seal ring bague à lèvres avec ressort anillo de cierre anello di tenuta Уплотнительное кольцо вала	pierścień uszczelniający wałka těsnící kroužek oleje tengely-tömítőgyűrű Στεγανοδακτύλιος άξονα Radyal şaft contası

So bestellen Sie richtig:
The right way to order:

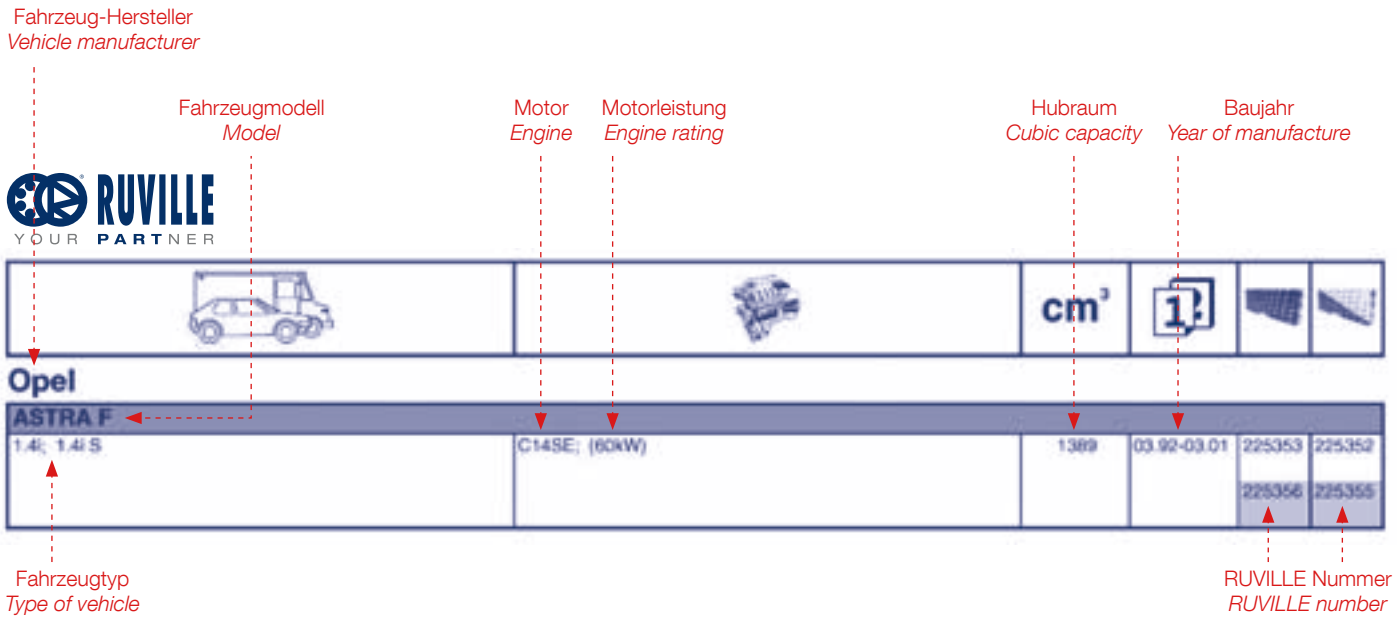

Beispiel: Opel

- ASTRA F
- 1.4i; 1.4i S
- mit Motor C14SE; 60 kW
- Hubraum 1389 cm³
- Baujahr 03.92-03.01

Ihre Bestellung bis Motornummer 02T14053

225353 = Nockenwellen-Vollsatz
225352 = Nockenwellen-Kurzsatz

oder Teilbestellung:
215352 = einzelne Nockenwelle
235340 = Kipphebel
265306 = Hydrostößel
275307 = Druckstücke
295310(N) = Wellendichtring (Nockenwelle)

Ihre Bestellung ab Motornummer 02T14054

225356 = Nockenwellen-Vollsatz
225355 = Nockenwellen-Kurzsatz

oder Teilbestellung:
215355 = einzelne Nockenwelle
235340 = Kipphebel
265306 = Hydrostößel
275307 = Druckstücke
295310(N) = Wellendichtring (Nockenwelle)

Wichtige Bestell-Informationen: Es ist unbedingt erforderlich, die ℹ-Spalte auf Einschränkungen und Ausnahmen vom links genannten Fahrzeugtyp zu überprüfen.

Fußnoten – Übersetzungen / Footnotes – Translations

1 Deutsch
Einige Audi- und VW-Motoren bis ca. Baujahr 1985 sind mit mechanischen Stößeln (265430) ausgestattet. Die mechanischen Stößel sind zusammen mit den Einstellscheiben 28 . . . . (zu finden auf Seite 185) auszuwechseln. Ab ca. Baujahr 1985 sind die Audi- und VW-Motoren mit hydraulischen Stößeln (265426) bestückt worden.

2 255010 + 255011 + 255012 + 255013

3 295310 (ST=stirnseitig), vorn + 295340 (GS=getriebeseitig), hinten

4 Wir empfehlen, beim Wechsel der Nockenwelle 215015 auch die Ölleitung 255000 zu wechseln.

5 265806 = Abstützscheibe 265804 = hydr. Kipphebelein-steckelement

6 Alle Kipphebel/Schlepphebel mit hydraulischem Element.

1 Englisch
Please note that some Audi and VW engines use a mechanical tappet (265430) which is used with valve tappet shims 28 . . . . (to be found on page 185) to approximately 1985. It is replaced by the hydraulic version (265426) approximately from 1985 on.

2 255010 + 255011 + 255012 + 255013

3 295310 (ST=front side), front + 295340 (GS=transmission side), back

4 We recommend to also change the oil pipe 255000 together with camshaft 215015.

5 265806 = support plate / 265804 = hydraulic insert element

6 All rocker arms/cam follower arms with hydraulic element.

1 Französisch
Quelques moteurs Audi et Volkswagen jusqu'à 1985 étaient équipés avec des poussoirs méchaniques (265430). Veuillez utiliser ces poussoirs avec les disques de tare série 28. . . (regardez p. 185). À partir de 1985 les moteurs Audi et Volkswagen étaient construits avec des poussoirs hydrauliques (265426)

2 255010 + 255011 + 255012 + 255013

3 295310 (ST = côté de distribution); devant + 295340 (GS=côté d'embrayage), à l'arrière

4 En cas de réparation nous recommandons de remplacer l'arbre à cames avec la conduite d'huile 255000.

5 265806 = disque d'étayage 265804 = élément hydraulique du culbuteur

6 Tous les culbuteurs compris avec l'élément hydraulique

1 Spanisch
Unos motores de Audi / VW fabricados antes del año 1985, tienen empujadores de válvula (265430). Los empujadores de válvula se tienen que cambiar junto con los discos ajustadores 28… (lo encuentra en la página 185). Los motores de Audi / VW fabricados después de 1985, tienen taqués hidraulicos (265426).

2 255010 + 255011 + 255012 + 255013

3 295310 (ST=frontal), delantero + 295340 (GS=lado del engranaje), trasero

4 Para el cambio del árbol de levas 215015, recomendamos cambiar la línea de toma de aceite 255000 también.

5 265806 = Placa de soporte / 265804 = taqué hidraulico

6 Todos los empujadores de válvula / taqués hidráulicos son con elementos hidráulicos.

1 Italienisch
Alcuni motori di Audi/VW construito a 1985 sono equipaggimenti con punterie (265430). Le punterie hidraulico e le rosette possono essere sostituito 28…(per trovare dal lato 185). Tutti i motori di Audi/VW fin da 1985 sono armato con le punterie (265426).

2 255010 + 255011 + 255012 + 255013

3 295310 (ST=parte frontale), anteriore + 295340 (GS=sul lato del cambio), posteriore

4 Suggeriamo a loro di cambiare la tubazione rigida 215015 con il cambiamento del' albero a camme 255000.

5 265806 = piatella punteria / 265804 = punteria hidraulica

6 Tutto i bilanciere sono completto con punterie hidraulico.

1 Russisch
Некоторые двигатели «Ауди» и «Фольксваген», примерно до 1985 года выпуска оснащены механическими толкателями (265430). Механические толкатели должны заменяться вместе с регулировочными шайбами 28 . . . . (см. стр. 185). Начиная примерно с 1985 года выпуска двигатели «Ауди» и «Фольксваген» укомплектованы гидравлическими толкателями (265426).

2 255010 + 255011 + 255012 + 255013

3 295310 (ST=фронтально), спереди + 295340 (GS=со стороны КПП), сзади

4 Мы рекомендуем при замене распредвала 215015 заменить также маслопровод 255000.

5 265806 = шайба для регулировки теплового зазора 265804 = гидрокомпенсатор зазоров клапанов двигателя

6 Все коромысла/балансиры с гидрокомпенсатором.

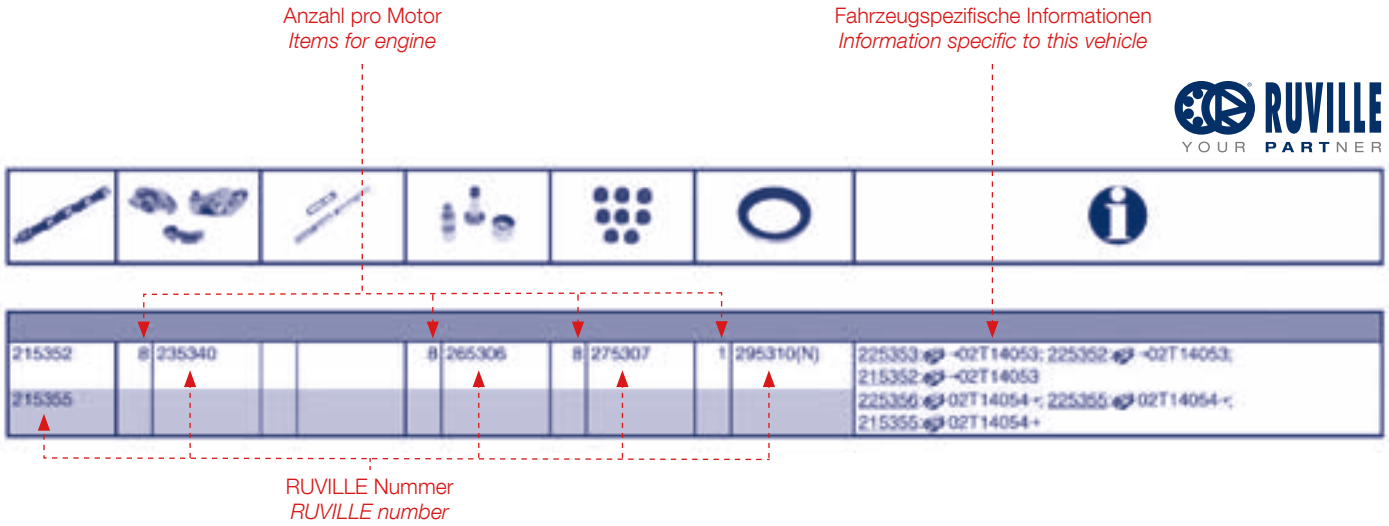

Example: Opel

- ASTRA F
- 1.4i; 1.4i S
- with engine C14SE; 60 kW
- Cubic capacity 1389 cm^3
- Year of manufacture 03.92-03.01

Your order up to engine number 02T14053

225353 = camshaft set
225352 = camshaft set (small set)

or details:
215352 = camshaft
235340 = rocker arm
265306 = tappet
275307 = thrust pad
295310(N) = seal ring (camshaft)

Your order from engine number 02T14054

225356 = camshaft set
225355 = camshaft set (small set)

or details:
215355 = camshaft
235340 = rocker arm
265306 = tappet
275307 = thrust pad
295310(N) = seal ring (camshaft)

Important order information: It is absolutely necessary to check the ℹ column thoroughly for restrictions and exceptions to the type of vehicle mentioned on the left side.

1 Polnisch
Niektóre silniki Audi i VW do roku 1985 były wyposażone w mechaniczne popychacze zaworów (265430) z regulacją płytkami 28...(strona 185). Od roku 1985 zostały zastąpione popychaczami hydraulicznymi (265426)

2 255010 + 255011 + 255012 + 255013

3 295310 (ST=od strony rozrządu), przedni + 295340 (GS=od strony skrzyni biegów), tylni

4 Zalecamy wymianę rurki doprowadzającej olej 255000 razem z wałkiem 215015.

5 265806 = płytka mocująca / 265804 = regulator hydrauliczny

6 Wszystkie dźwigienki z elementami hydraulicznymi

1 Tschechisch
Některé Audi a VW motory do roku výroby cca 1985 jsou vybaveny mechanickými zdvihátky (265430). Mechanická zdvihátka jsou společně s vymezovacími podložkami 28….(k nalezení na straně 185) vyměněna. Od roku výroby cca 1985 jsou Audi a VW motory osazeny hydraulickými zdvihátky (265426).

2 255010 + 255011 + 255012 + 255013

3 295310 (ST = čelní), přední + 295340 (GS = na straně převodovky), zadní

4 Při výměně vačkové hřídele 215015 doporučujeme vyměnit také olejové potrubí 255000.

5 265806 = podpěrná podložka 265804 = hydraulická zdvihátka

6 Všechna vahadla s hydraulickými prvky.

1 Ungarisch
Egyes Audi és VW motorok 1985-ig mechanikus szeleptőkével (265430) kerültek szerelésre . A mechanikus szeleptőkéket a beállító lapkával 28...együtt (a 185-as oldalon található) kell cserélni.1985 évjárattól az Audi és VW motorok hidraulikus szeleptőkével (265426) kerültek gyártásra.

2 255010 + 255011 + 255012 + 255013

3 295310 (ST=homlok oldali), elol + 295340 (GS= váltóoldali), hátul

4 A 215015 számu vezérmütengely cseréje esetén a 255000 számu olajvezetéket is cserélni kell.

5 265806 = Tartólapka 265804 = hidraulikus szeleptőke

6 Az összes billenő es vonó szelephimba hidraulikus egységgel van ellátva

1 Griechisch
Μερικά κινητήρες Audi και VW έως έτος κατασκευής περ. 1985 είναι εξοπλισμένοι με μηχανικούς πείρους βαλβίδων (265430). Οι μηχανικοί πείροι βαλβίδων πρέπει να αντικατασταθούν μαζί με τους δίσκους ρύθμισης 28 . . . . (θα τους βρείτε στη σελίδα 185). Περίπου από το έτος κατασκευής 1985 και μετά εξοπλίστηκαν οι κινητήρες Audi και VW με υδραυλικούς πείρους (265426).

2 255010 + 255011 + 255012 + 255013

3 295310 (ST=μετωπικά), μπροστά + 295340 (GS=στην πλευρά του κιβωτίου), πίσω

4 Συνιστούμε κατά την αλλαγή του εκκεντροφόρου άξονα 215015 και την αντικατάσταση του αγωγού του λαδιού 255000.

5 265806 = δίσκος στήριξης / 265804 = υδραυλ. Στοιχείο βραχίονα αλλαγής ακτεύθυνσης

6 Όλοι οι βραχίονες αλλαγής κατεύθυνσης/ζυγοί με υδραυλικό στοιχείο.

1 Türkisch
Yaklaşık 1985 modele kadar bazı Audi ve VW motorları, mekanik sübap iticileri ile (265430) donatılmış durumdadır. Mekanik sübap iticilerinin 28. . . . ayar diskleri (bkz. Sayfa 185) ile beraber değiştirilmeleri gerekmektedir. Yaklaşık 1985 modelden itibaren Audi ve VW motorları, hidrolik sübap iticileri ile (265426) donatılmış durumdadır.

2 255010 + 255011 + 255012 + 255013

3 295310 (ST=ön tarafta), önde + 295340 (GS=şanzıman tarafında), arkada

4 215015 eksantrik milini değiştirirken 255000 yağ borusunun da değiştirilmesini tavsiye ederiz.

5 265806 = Destek diski / 265804 = Hidr. külbütör manivelası geçme elemanı

6 Tüm külbütör manivelaları/kam izleyicileri hidrolik elemanlıdır.

RUVILLE

YOUR PARTNER

Nockenwellen und Reparatursätze

Camshafts and Kits
Arbres à cames et Kits
Arboles de levas y Kits
Albero a camme e kit riparazione
Распредвалы и ремонтные комплекты
Wałki rozrządu i zestawy naprawcze
Vačkové hřídele a Sady
Vezérmütengely és Javitókészlet
Εκκεντροφόροι και σετ επισκευής
Kam mil ve tamir takımları

INHALT - CONTENTS - MATIÈRE

Nockenwellenverstellsysteme / variable camshaft timing system 8
Alfa Romeo 14
Audi 16
Autobianchi 42
BMW 42
Chevrolet 54
Chrysler 56
Citroën 56
Dacia 68
Daewoo 68
Daimler 70
Dodge 70
Fiat 70
Ford 80
Ford USA 90
Honda 90
Hyundai 90
Jaguar 92
Jeep 92
Kia 92
Lada 94
Lancia 94
Land Rover 98
Lexus 98
Mazda 98
Mercedes-Benz 100
Mini 118
Mitsubishi 120
Nissan 120
Opel 124
Peugeot 136
Porsche 148
Puch 150
Renault 150
Rover 156
Saab 156
Seat 158
Skoda 174
Smart (MCC) 178
Ssangyong 178
Suzuki 178
Talbot 180
Toyota 180
Vauxhall 184
Volkswagen 194
Volvo 236
MAN 242
Mercedes-Benz 242
OE-Referenzen / OE references 246
Cross-Referenzen / cross references 253
Stückliste / parts list 256
Maße / measurements: Einstellscheiben, Abstützscheiben, Kugelpfannen, Stößel / adjuster shims, support plates, ball pads, tappets / hydraulic lifter 258
..... 260
Technische Information / technical information 269
Symbole und Erklärungen / symbols and descriptions 271

RUVILLE
YOUR PARTNER

QUALITÄT AUS TRADITION.

Seit rund 90 Jahren bietet RUVILLE Ersatzteile in OE-Qualität. So profitieren unsere Kunden seit Jahrzehnten von unserer Erfahrung, unserem Know-how und vertrauen auf unsere Kompetenz.

Heute sind wir Mitglied der Schaeffler Gruppe und haben uns als ebenso verlässlicher wie flexibler Handelspartner und namhafter Spezialist für Motor, Fahrwerk und Service im weltweiten Aftermarket für PKW und NKW etabliert. Qualität ist der Anspruch, dem unsere Ersatzteile und Kits ebenso entsprechen müssen wie unser Service und die Lieferfähigkeit.

Als mitdenkender Dienstleister orientieren wir uns an den aktuellen Bedürfnissen unserer Kunden. Aber wir sind der Zeit auch gern voraus und setzen mit intelligenten Reparaturlösungen, praxisgerecht konfektioniert, immer wieder neue Maßstäbe.

Für diese Erfolge kooperieren wir mit ausgewählten Partnern, die zu internationalen Erstausrüstern und Qualitätslieferanten zählen. Und um unsere hohen Qualitätsansprüche kontinuierlich zu erfüllen, lassen wir unsere Produkte zusätzlich von unabhängigen Testinstituten sorgfältig prüfen.

RUVILLE bedankt sich auch für Ihr Vertrauen und wünscht Ihnen viel Erfolg mit unseren Produkten in OE-Qualität.

A TRADITION OF QUALITY.

RUVILLE has been offering replacement parts to OE quality standards for 90 years. Our customers, therefore, have been benefiting from our experience, expertise, and confidence in our competence for many decades.

Today, we are a member of the Schaeffler Group, and we have established ourselves as a reliable and flexible trading partner, as well as a well-known specialist for engines, chassis and service in the worldwide aftermarket for private and commercial vehicles. Our replacement parts and kits, just like our service and ability to supply, must correspond with our quality requirements.

As a service provider who always thinks ahead, we orientate ourselves to the latest needs of our customers. But we also like to be ahead of the times and continually set new standards with our intelligent and practice orientated repair solutions.

We cooperate with selected partners, who are listed as international original equipment manufacturers and quality suppliers, in order to achieve these successes. In order to continually fulfill our quality claims, our products undergo additional thorough checks by independent test institutions.

RUVILLE would like to thank you for your confidence, and to wish you every success with our OE quality products.

PERFORMING OE QUALITY
GERMAN KNOW-HOW
ENGINEERED WORLDWIDE

Neu im Sortiment

Nockenwellenverstellsysteme

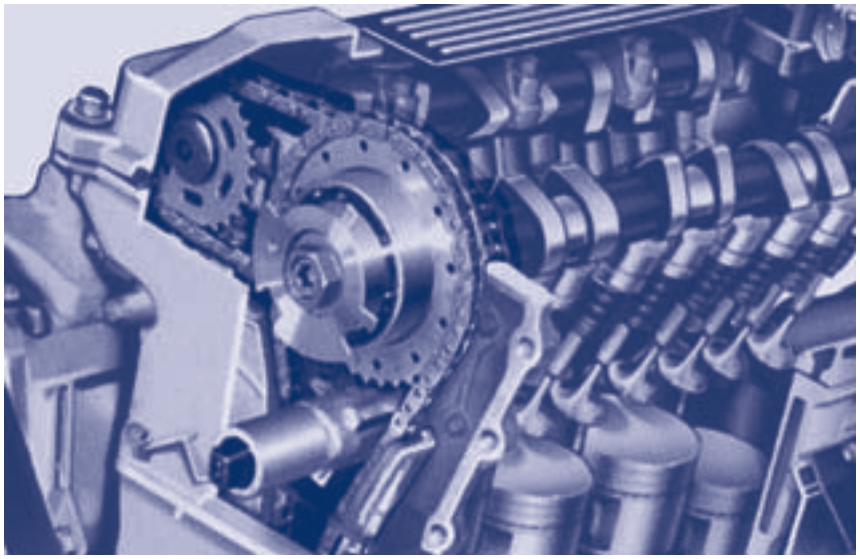

D

Jeder zweite produzierte Benzinmotor wird heute mit einem Nockenwellenversteller ausgestattet. Je nach Fahrzeughersteller, Motortyp und Bauart sind dabei ein, zwei oder vier Nockenwellenversteller verbaut. Nun ist eine Auswahl dieser Produkte auch im Schaeffler Automotive Aftermarket erhältlich und wird Ihnen auf den nachfolgenden Seiten dieses Kataloges angeboten.

Die Nockenwellenverstellung ermöglicht die optimale Einstellung der Ventilsteuerzeiten über die Parameter Motorlast und -drehzahl. Damit ist, je nach Motorkonzept und Anzahl der Versteller, eine deutliche Absenkung von Kraftstoffverbrauch und Abgasemissionen sowie eine Steigerung von Leistung und Drehmoment darstellbar.

Je nach Motorausführung kann die Nockenwellenverstellung sowohl an der Einlass- als auch an der Auslassnockenwelle eingesetzt werden. Bei SOHC-Motoren ist die gemeinsame Verstellung aller Steuerzeiten möglich.

Die Schaeffler Gruppe setzt bereits seit vielen Jahren den Umweltgedanken bei Produktentwicklung, Einkauf, Fertigung sowie Ver- und Entsorgung an die oberste Stelle. Erklärtes Ziel ist es, individuelle Mobilität bei hohem Fahrkomfort und geringem Kraftstoffverbrauch auch in Zukunft sicher zu stellen. Durch Innovationen und zukunftsorientierte Technologien können Wettbewerbsvorteile erzielt werden, da sowohl die Umwelt als auch der Fahrer eines Fahrzeugs davon profitieren. Die Ressourcen und Umwelt schonenden variablen Nockenwellenverstellsysteme werden diesen Anforderungen gerecht. Das Sortiment des Schaeffler Automotive Aftermarkets wird damit um weitere zukunftsweisende Produkte ergänzt.

New in the range | Nouveautés I Nuevo en Catálogo

Variable camshaft timing system | Systèmes de déphasage d‘arbre à cames I Sistemas de regulación del árbol de levas

GB

Every second petrol engine produced today is equipped with a camshaft timer. One, two or three camshaft timers are built into the engine depending on the vehicle manufacturer, engine type and design. A selection of these products is now available in the Schaeffler Automotive Aftermarket and presented on the following pages of this catalogue.

The camshaft timers enable optimal setting of the valve timings via the parameters engine load and engine revs. This means that a reduction in fuel consumption and exhaust emissions, as well as an increase in performance and torque is possible depending on the engine design and the number of centrifugal spark advances.

Depending on the engine type, the camshaft adjustment can be used in the intake camshaft as well as in the outlet camshaft. In the case of SOHC engines, all timings can be adjusted at the same time.

For many years, Schaeffler Group has given environmental protection top priority during product development, purchasing and manufacturing, as well as in the logistics and waste disposal stages. Our aim is to ensure individual mobility, a high level of travelling comfort and low fuel consumption way into the future. With innovations and future-oriented technology, competitive advantages can be achieved offering significant benefits for the environment and drivers alike. The variable camshaft timing systems meet these demands by helping to protect both resources and the environment. These new innovations mark the expansion of the Schaeffler Automotive Aftermarkets range to include even more forward-looking products.

F

Un moteur essence sur deux est aujourd‘hui équipé d‘un déphaseur d‘arbre à cames. Il peut s‘agir d‘un, de deux ou de quatre déphaseurs d‘arbre à cames en fonction du constructeur, du modèle et du type de moteur. Ce type de produits est désormais proposé par la division Aftermarket de Schaeffler Automotive et va vous être présenté aux pages suivantes du présent catalogue.

Le déphasage d‘arbre à cames permet d‘optimiser le réglage des temps de commande en prenant en considération les paramètres état de charge et régime du moteur. On parvient ainsi, en fonction du concept de moteur et du nombre des déphaseurs, à obtenir une nette réduction de la consommation de carburant et des émissions de gaz d‘échappement ainsi qu‘une augmentation des performances et du couple.

En fonction de la version de moteur, le déphasage d‘arbre à cames peut être utilisé sur l‘arbre à cames d‘admission comme sur l‘arbre à cames d‘échappement. Sur les moteurs SOHC, il est possible de procéder au déphasage simultané de tous les temps de commande.

Depuis de nombreuses années déjà, le groupe Schaeffler donne la priorité aux questions environnementales, que ce soit en phase de développement, d‘achat, de production, d‘approvisionnement énergétique ou d‘élimination des déchets. L‘objectif consiste à assurer à long terme la mobilité individuelle dans des conditions de confort élevées et pour une consommation réduite de carburant. C‘est par les innovations et les technologies d‘avenir que nous comptons nous démarquer par rapport à la concurrence au profit de l‘environnement et des conducteurs. Les systèmes de déphasage d‘arbre à cames satisfont à ces exigences en ménageant les ressources et l‘environnement. Ils viennent ainsi compléter par des produits novateurs la gamme de produits de la division Aftermarket de Schaeffler Automotive.

E

En la actualidad uno de cada dos motores de gasolina fabricados está equipado con un regulador del árbol de levas. Asimismo, según el fabricante del vehículo, tipo de motor y versión pueden montarse uno, dos o cuatro de estos reguladores del árbol de levas. Ahora también puede adquirirse una selección de estos productos en Schaeffler Automotive Aftermarket. Encontrará éste nuevo producto en las páginas siguientes de este catálogo.

La regulación del giro del árbol de levas permite el ajuste óptimo de los tiempos de control de las válvulas mediante los parámetros de la carga del motor y las revoluciones.

De este modo, según el tipo de motor y el número de reguladores, es posible una clara reducciónde l consumo de combustible y de las emisiones de gases de escape, así como un incremento del rendimiento y del par motor.

Según la versión del motor, el ajuste del árbol de levas puede usarse tanto en el árbol de levas de admisión como también en el de escape. En el caso de los motores SOHC la regulación es simultánea. Desde hace muchos años el Grupo Schaeffler otorga prioridad al medioambiente en el proceso de desarrollo del producto,compra de materiales, fabricación, comercialización y reciclaje. El objetivo claro es garantizar también en el futuro la movilidad individual con una elevado comfort de conducción y un bajo consumo de combustible. Mediante soluciones innovadoras y tecnologías orientadas al futuro, deben conseguirse ventajas competitivas provechosas para el medioambiente y para el conductor de un vehículo.Los sistemas de regulación variable de los árboles de levas cuidan los recursos y el medioambiente cumpliendo estos requisitos.La gama de Schaeffler Automotive Aftermarket se completa constantemente con productos orientados al futuro.

Novità a catalogo | Nowość w naszym asortymencie | Новинки в ассортименте

Sistemi di regolazione dell‘albero a camme | Systemy zmiennych faz wałka rozrządu | Systemy zmiennych faz wałka rozrządu

I

Un motore a benzina su due è oggi dotato di variatore dell‘albero a camme. A seconda del costruttore, del tipo di motore e del modello, sono montati uno, due o tre variatori dell‘albero a camme. Questa varietà di prodotti è anche disponibile presso Schaeffler Automotive Aftermarket e viene proposta ai nostri clienti nelle pagine successive del catalogo. La regolazione dell‘albero a camme consente di regolare al meglio i tempi di comando delle valvole in base ai parametri carico e numeri di giri del motore. In base al tipo di motore e al numero di variatori, si riducono così notevolmente il consumo di carburante e le emissioni, oltre ad avere un aumento di potenza e di coppia.

A seconda del tipo di motore, la regolazione dell‘albero a camme può essere utilizzata sia per l‘albero a camme lato iniezione che lato scarico. Nei motori SOHC è possibile regolare contemporaneamente tutti i tempi di comando.

Il gruppo Schaeffler attribuisce già da diversi anni la massima importanza alla tutela dell‘ambiente nello sviluppo di prodotti, negli acquisti, nella produzione e nella fornitura e smaltimento. L‘obbiettivo dichiarato è garantire anche in futuro la mobilità dei singoli con un elevato comfort di guida e un basso consumo di carburante. Grazie all‘innovazione e alla tecnologia volta al futuro si ottengono vantaggi rispetto alla concorrenza a favore sia dei guidatori che dell‘ambiente. Le risorse e i sistemi di regolazione dell‘albero a camme variabili a basso impatto ambientale soddisfano tali requisiti. All‘assortimento di Schaeffler Automotive Aftermarket si aggiungono quindi altri prodotti innovativi.

PL

Co drugi produkowany silnik benzynowy jest wyposażony dzisiaj w moduł zmiennych faz wałka rozrządu.

W zależności od producenta pojazdów, typu silnka i rodzaju konstrukcji montowane są jeden, dwa lub cztery moduły zmiennych faz wałka rozrządu.

Wybór tych produktów jest już dostępny na rynku aftermarketowym „Schaeffler Automotive Aftermarket“ i oferowany na poniższych stronach tego katalogu.
Moduł zmiennych faz wałka rozrządu umożliwia optymalną regulację rozrządu zaworowego odpowiednio do parametrów obciążenia silnika i jego prędkości obrotowej.
Dzięki temu możliwe jest w zależności od koncepcji silnika i ilości zamontowanych modułów zmiennych faz wyraźne obniżenie zużycia paliwa oraz emisji gazów spalinowych, jak również podwyższenie mocy i momentu obrotowego.
W zależności od konstrukcji silnika, moduły zmiennych faz wałka rozrządu mogą być zamontowane zarówno na wałku rozrządu zaworów wlotowych, jak i wylotowych. W przypadku silników SOHC możliwe jest jednoczesne regulowanie faz.
Grupa Schaeffler realizuje już od wielu lat priorytetowo zasadę ochrony środowiska przy projektowaniu oraz dalszym rozwijaniu produktów, przy zakupie, produkcji, zaopatrzeniu oraz usuwaniu odpadów. Zadeklarowanym celem na przyszłość jest zapewnienie indywidualnej mobilności z zachowaniem wysokiego komfortu jazdy i niewielkiego zużycia paliwa. Nasze innowacje oraz technologie wybiegające w przyszłość pozwolą kierowcom osiągać konkurencyjną przewagę i zapewniają wymierne korzyści dla środowiska. Systemy zmiennych faz wałka rozrządu spełniają wymagania w zakresie redukcji obciążenia środowiska naturalnego oraz podnoszą efektywność wykorzystania zasobów.

Aasortyment rynku aftermarketowego „Schaeffler Automotive Aftermarket“ został rozszerzony o dalsze produkty wytyczające przyszłość.

RUS

Каждый второй производимый сегодня двигатель оснащён регулятором фаз газораспределения.

В зависимости от компании-производителя автомобиля, типа двигателя и конструкции бывают установлены один, два или четыре регулятора фаз газораспределения.
Ассортимент компании Schaeffler Automotive Aftermarket также пополнился этими изделиями, которые будут предложены Вам на следующих страницах нашего каталога.
Регулировка фаз газораспределения позволяет выполнить оптимальную настройку фаз клапанного газораспределения через такие параметры, как нагрузка и число оборотов двигателя.
Благодаря этому, в зависимости от принципиальной конструкции двигателя и числа регуляторов, можно значительно снизить расход топлива и токсичность ОГ, а также повысить мощности и крутящего момента.
В зависимости от конструкции двигателя регулировка фаз газораспределения может выполняться как на впуске, так и на выпуске. В двигателях SOHC (с верхним распредвалом) возможна общая регулировка всех фаз газораспределения.
Для концерна Schaeffler уже много лет приоритетным является направление по охране окружающей среды – при разработке новой продукции, закупках, производстве, а также в сфере снабжения и удаления отходов.
Наша цель – обеспечить и в будущем индивидуальную мобильность в сочетании с комфортабельностью езды и низким расходом топлива. За счёт новшеств и передовых технологий мы создаём дополнительные преимущества для охраны окружающей среды и для водителя. Этим требованиям отвечают адаптивные системы регулирования фаз газораспределения, ресурсосберегающие и экологичные. Таким образом, ассортимент компании Schaeffler Automotive Aftermarket пополнился ещё одной передовой группой изделий.

Alfa Romeo

		cm³				
159						
1.8 TBi	939B1.000; (147kW)	1742	05.09-	2X	**205802**	
1.8 MPI	939A4.000; (103kW)	1796	03.07-	2X	**205301**	
BRERA						
1.8 TBi	939B1.000; (147kW)	1742	05.09-	2X	**205802**	
GUILIETTA (940)						
1.8 TBi	940A1.000; (173kW)	1742	04.10-	2X	**205802**	
MITO						
1.4	199A1.000; 199A6.000; 955A1.000; (58kW-70kW)	1368	09.08-	1X	**205803**	
				1X	**205804**	
				1X	**205807**	
SPIDER						
1.8 TBi	939B1.000; (147kW)	1742	05.09-	2X	**205802**	

Audi

A3						
1.8 TFSI	BZB; CDAA; (118kW)	1798	04.08-	1X, BZB	**205701**	
				1X, CDAA	**205702**	
				1X, CDAA	**205703**	
2.0 TFSI	CAWB; CBFA; CCZA; (147kW)	1984	04.08-	1X, CAWB; CBFA	**205701**	
				1X	**205702**	
				1X, CCZA	**205703**	
A3 (8P1, 8PA)						
1.8 TFSI	BYT; BZB; CDAA; (118kW)	1798	11.06-	1X, BYT; BZB	**205701**	
				1X	**205702**	
				1X, CDAA	**205703**	
1.8 TFSI	CDAA; (118kW)	1798	07.08-	1X	**205702**	
				1X	**205703**	
2.0 TFSI	AXX; BPY; BWA; CAWB; CCZA; (147kW)	1984	09.04-	1X, CAWB	**205701**	
				1X, CAWB; CCZA	**205702**	
				1X, CCZA	**205703**	
2.0 TFSI	AXX; BWA; CCZA; (147kW)	1984	09.04-	1X, CCZA	**205702**	
				1X, CCZA	**205703**	
2.0 TFSI	AXX; BWA; CAWB; CCZA; (147kW)	1984	09.04-	1X, CAWB	**205701**	
				1X, CAWB; CCZA	**205702**	
				1X, CCZA	**205703**	
2.0 TFSI	AXX; BWA; CCZA; (147kW)	1984	09.04-	1X, CCZA	**205702**	
				1X, CCZA	**205703**	
A4 (8K2, 8K5)						
1.8 FSI; 1.8 TFSI; 2.0 TFSi; 2.0 TFSI flexible fuel; 2.0 TFSI flexible fuel quattro	CABA; CABB; CAEA; CAEB; CDHA; CDHB; CDNB; CDNC; (88kW-155kW)	1798-1984	11.07-	1X	**205702**	
				1X	**205703**	
A4 (8KH)						
2.0 TFSI	CDNC; (153kW-155kW)	1984	04.09-	1X	**205702**	
				1X	**205703**	
A5 (8F,8T,8TA)						
1.8 TFSI	CABD; CDHB; (118kW-125kW)	1798	10.07-	1X	**205702**	
2.0 TFSI	CAEA; CDNB; CDNC; (132kW-155kW)	1984	06.08-	1X	**205702**	
				1X	**205703**	
Q5						
2.0 TFSI	CDNC; (155kW)	1984	11.08-	1X	**205702**	
				1X	**205703**	
TT (8J3, 8J9)						
1.8 TFSI	CDAA; (118kW)	1798	06.08-	1X	**205702**	
				1X	**205703**	
2.0 TFSI	BPY; BWA; CCTA; CCZA; (147kW)	1984	10.06-	1X, CCZA; CCTA	**205702**	
				1X, CCZA; CCTA	**205703**	
2.0 TFSI	BPY; BWA; CCTA; CCZA; (147kW)	1984	02.07-	1X, CCTA; CCZA	**205702**	
				1X, CCTA; CCZA	**205703**	
2.0 TFSI	CCZA; (147kW)	1984	06.08-	1X	**205702**	
				1X	**205703**	

RUVILLE
YOUR PARTNER

Citroën

		cm³				
C2						
1.4 16V	KFU(ET3J4); (65kW)	1360	06.06-	1X	**205901**	
				1X, (ELV)	**205902**	
C3 (FC_, HB_)						
1.4 16V	KFU(ET3J4); (65kW)	1360	12.03-	1X	**205901**	
				1X, (ELV)	**205902**	
C4						
1.4 16V	KFU(ET3J4); (65kW)	1360	11.04-	1X	**205901**	
				1X, (ELV)	**205902**	
2.0 16V	EW10A; RFJ-EW10A; (103kW)	1997	11.04-	1X, P.→10653	**205901**	
2.0 16V	EW10J4S; RFK(EW10J4S); (130kW)	1997	11.04-	1X	**205901**	
C5 (RC_, RE_)						
2.0 16V	EW10A; RFJ-EW10A; (103kW)	1997	09.04-	1X, P.→10919	**205901**	
C8						
2.0 16V	RFJ-EW10A; (103kW)	1997	09.05-	1X, P.→10919	**205901**	

Fiat

500						
1.2	169A4.000; (51kW)	1242	10.07-	1X, 3952692→	**205801**	
				1X, →3952691	**205804**	
				1X, 3952692→	**205806**	
CROMA (194)						
1.8 16V	939A4.000; (103kW)	1796	12.05-	2X	**205301**	
DOBLO (119, 223)						
1.4	350A1.000; (57kW)	1368	10.05-	1X, 3952692→	**205801**	
				1X, →3952691	**205804**	
				1X, 3952692→	**205806**	
GRANDE PUNTO (199)						
1.4	350A1.000; (57kW)	1368	10.05-	1X, 3952692→	**205801**	
				1X, →3952691	**205804**	
				1X, 3952692→	**205806**	
1.4 16V	199A6.000; (70kW)	1368	10.05-	1X	**205803**	
				1X	**205804**	
				1X	**205807**	
IDEA						
1.4	350A1.000; (57kW)	1368	10.05-	1X, 3952692→	**205801**	
				1X, →3952691	**205804**	
				1X, 3952692→	**205806**	
LINEA						
1.4	350A1.000; (57kW)	1368	06.07-	1X, 3952692→	**205801**	
				1X, →3952691	**205804**	
				1X, 3952692→	**205806**	

Ford

KUGA						
2.5	(147kW)	2522	03.09-	1X, (ELV)	**206502**	
				1X, (ALV)	**206503**	
MONDEO IV						
2.5	HUBA; (162kW)	2521	03.07-	1X, (ELV)	**206502**	
				1X, (ALV)	**206503**	
S-MAX						
2.5 ST	HUWA; (162kW)	2521	05.06-	1X, (ELV)	**206502**	
				1X, (ALV)	**206503**	

Lancia

DELTA III						
1.8 Di	(147kW)	1759	01.09-	2X, 939B1.000	**205802**	
MUSA						
1.4	350A1.000; (57kW)	1368	09.05-	1X, 3952692→	**205801**	

Lancia

		cm³				
MUSA						
1.4	350A1.000; (57kW)	1368	09.05-	1X, →3952691	**205804**	
				1X, 3952692→	**205806**	
YPSILON						
1.4	350A1.000; (57kW)	1368	02.06-	1X, 3952692→	**205801**	
				1X, →3952691	**205804**	
				1X, 3952692→	**205806**	

Opel

ASTRA H						
1.6	Z16XER; (85kW)	1598	12.06-	2X, →20MS7868	**205301**	
				1X, (ELV)	**205302**	
				1X, (ALV)	**205303**	
				2X, 20MS7869→	**205805**	
1.8	Z18XER; (103kW)	1796	08.05-	2X	**205301**	
				1X, (ELV)	**205302**	
				1X, (ALV)	**205303**	
ASTRA J						
1.6	(85kW)	1598	12.09-	A16XER, 1X, (ALV)	**205303**	
				A16XER, 2X	**205805**	
INSIGNIA						
1.6; 1.8	A16XER; A18XER; (85kW-103kW)	1598-1796	07.08-	1X, (ELV)	**205302**	
				1X, (ALV)	**205303**	
				2X	**205805**	
SIGNUM						
1.8	Z18XER; (103kW)	1796	09.05-	2X	**205301**	
				1X, (ELV)	**205302**	
				1X, (ALV)	**205303**	
VECTRA C / GTS						
1.8	Z18XER; (103kW)	1796	01.06-	2X	**205301**	
				1X, (ELV)	**205302**	
				1X, (ALV)	**205303**	
ZAFIRA						
1.6	Z16XER; (85kW)	1598	01.08-	2X, →20MS7868	**205301**	
				1X, (ELV)	**205302**	
				1X, (ALV)	**205303**	
				2X, 20MS7869→	**205805**	
1.8	Z18XEP; Z18XER; (103kW)	1796	07.05-	2X, Z18XER	**205301**	
				1X, Z18XER, (ELV)	**205302**	
				1X, Z18XER, (ALV)	**205303**	

Peugeot

206						
1.4 16V	KFU(ET3J4); (65kW)	1360	10.03-	1X	**205901**	
				1X, (ELV)	**205902**	
2.0 RC	RFK(EW10J4S); (130kW)	1997	07.03-	1X	**205901**	
207						
1.4 16V	KFU(ET3J4); (65kW)	1360	02.06-	1X	**205901**	
				1X, (ELV)	**205902**	
307						
1.4; 1.4 16V	KFU(ET3J4); (65kW)	1360	11.03-	1X	**205901**	
				1X, (ELV)	**205902**	
2.0 16V	RFJ(EW10A); (103kW)	1997	03.05-	1X, P.→10702	**205901**	
2.0; 2.0 16V	RFK(EW10J4S); (130kW)	1997	10.03-	1X	**205901**	
407						
2.0 16V	RFJ(EW10A); (103kW)	1997	09.05-	1X, P.→10919	**205901**	
807						
2.0 16V	RFJ(EW10A); (103kW)	1997	09.05-	1X, P.→10919	**205901**	
1007						
1.4 16V	KFU(ET3J4); (65kW)	1360	10.05-	1X	**205901**	
				1X, (ELV)	**205902**	

RUVILLE YOUR PARTNER

Skoda

		cm³				
OCTAVIA (1Z)						
1.8 TSI	BZB; (118kW)	1798	06.07-	1X	**205701**	
1.8 TSI	CDAA; (118kW)	1798	11.08-	1X	**205701**	
				1X	**205702**	
SUPERB (3T)						
1.8 TSI	BZB; CDAA; (118kW)	1798	03.08-	1X	**205701**	
				1X	**205702**	

Vauxhall

ASTRA MK VI						
1.6 i 16v VVT	(85kW)	1598	12.09-	A16XER, 1X, (ALV)	**205303**	
				A16XER, 2X	**205805**	
INSIGNIA						
1.6; 1.8	A16XER; A18XER; (85kW-103kW)	1598-1796	07.08-	1X, (ELV)	**205302**	
				1X, (ALV)	**205303**	
				2X	**205805**	
VECTRA MK II						
1.8	Z18XER; (103kW)	1796	01.06-	2X	**205301**	
				1X, (ELV)	**205302**	
				1X, (ALV)	**205303**	
ZAFIRA MK II						
1.8	Z18XEP; Z18XER; (103kW)	1796	07.05-	2X, Z18XER	**205301**	
				1X, Z18XER, (ELV)	**205302**	
				1X, Z18XER, (ALV)	**205303**	

Volkswagen

EOS						
2.0 FSI	BPY; BWA; CAWB; CBFA; CCTA; CCZA; (147kW)	1984	03.06-	1X, CCZA	**205702**	
				1X, CCZA	**205703**	
GOLF VI						
2.0 TSI	CCZB; (155kW)	1984	04.09-	1X	**205702**	
				1X	**205703**	
JETTA III						
2.0 TFSI	BPY; BWA; CCTA; (147kW)	1984	10.05-	1X, CCTA	**205701**	
				1X, CCTA	**205702**	
PASSAT (3C2,3C5)						
2.0 TFSI	AXX; BPY; BWA; CAWB; CBFA; CCTA; CCZA; (147kW)	1984	07.05-	1X, CAWB; CCTA	**205701**	
PASSAT CC						
2.0 TSI	CAWB; CBFA; CCTA; CCZA; (147kW)	1984	06.08-	1X	**205701**	
SCIROCCO						
2.0 TSI	CAWB; (147kW)	1984	09.08-	1X	**205701**	
TIGUAN						
2.0 TFSI	CAWA; CAWB; CCZA; (125kW-147kW)	1984	09.07-	1X	**205701**	

Volvo

C30						
2.4 i	B5244S4; (125kW)	2435	10.06-	1X, (ELV)	**206502**	
				1X, (ELV)	**206505**	
T5	B5254T3; (162kW)	2521	10.06-	1X, (ELV)	**206502**	
				1X, (ALV)	**206503**	
				1X, (ELV)	**206505**	
				1X, (ALV)	**206506**	
T5	B5254T7; (169kW)	2521	03.07-	1X, (ELV)	**206502**	
				1X, (ALV)	**206503**	
C70 II						
2.4; 2.4 i	B5244S4; B5244S5; (103kW-125kW)	2435	03.06-	1X, (ELV)	**206502**	
				1X, (ELV)	**206505**	
T5	B5254T3; (162kW)	2521	03.06-	1X, (ELV)	**206502**	
				1X, (ALV)	**206503**	

RUVILLE
YOUR PARTNER

Volvo

		cm³				
C70 II						
T5	B5254T3; (162kW)	2521	03.06-	1X, (ELV)	**206505**	
				1X, (ALV)	**206506**	
T5	B5254T7; (169kW)	2521	03.07-	1X, (ELV)	**206502**	
				1X, (ALV)	**206503**	
S40 II						
2.4	B5244S5; (103kW)	2435	01.04-	1X, (ELV)	**206502**	
				1X, (ELV)	**206505**	
2.4	B5244S; (125kW)	2435	01.04-	1X, (ELV)	**206505**	
T5	B5254T3; (162kW)	2521	01.04-	1X, (ELV)	**206502**	
				1X, (ALV)	**206503**	
				1X, (ELV)	**206505**	
				1X, (ALV)	**206506**	
T5	B5254T7; (169kW)	2521	03.07-	1X, (ELV)	**206502**	
				1X, (ALV)	**206503**	
S80 II						
2.5 T	B5254T6; (147kW)	2521	03.06-	1X, (ELV)	**206502**	
				1X, (ALV)	**206503**	
				1X, (ELV)	**206505**	
				1X, (ALV)	**206506**	
V50						
2.4	B5244S5; (103kW)	2435	04.04-	1X, (ELV)	**206502**	
				1X, (ELV)	**206505**	
2.4	B5244S; (125kW)	2435	04.04-	1X, (ELV)	**206505**	
T5	B5254T3; (162kW)	2521	04.04-	1X, (ELV)	**206502**	
				1X, (ALV)	**206503**	
				1X, (ELV)	**206505**	
				1X, (ALV)	**206506**	
V70 III						
2.5 T	B5254T6; (147kW)	2521	08.07-	1X, (ELV)	**206502**	
				1X, (ALV)	**206503**	
				1X, (ELV)	**206505**	
				1X, (ALV)	**206506**	

		cm³			
Alfa Romeo					
33 (905)					
1.2	AR30585; (50kW)	1186	06.83-12.89		
1.3	AR30502; AR30586; (55kW)	1351	06.83-12.89		
1.3	AR30168; AR30587; (63kW)	1351	10.84-12.89		
1.5	AR30146; AR30588; (75kW-77kW)	1490	07.86-12.89		
1.5 QV	AR30146; AR30508; AR30588; (77kW)	1490	06.84-12.89		
33 (905A)					
1.5	AR30588; (75kW)	1490	12.86-12.89		
1.5	AR30146; AR30508; AR30588; (77kW)	1490	12.86-12.89		
33 (907A)					
1.4 i.e.; 1.7 i.e.	AR30736; AR30737; AR30737A; AR30753; AR30755; (65kW-79kW)	1351-1712	01.90-09.94		
1.7 16V	AR30746; AR30747; (95kW-101kW)	1712	01.90-09.94		
33 (907B)					
1.4 i.e.	AR30755; (65kW)	1351	06.91-09.94		
1.4 i.e.	AR30587; AR30755; (66kW)	1351	06.91-09.94		
1.4 i.e.; 1.7 i.e.	AR30736; AR30737; AR30755; (66kW-79kW)	1351-1712	01.90-09.94		
1.7 16V	AR30746; AR30747; (95kW-101kW)	1712	01.90-09.94		
145 (930)					
1.4 i.e.	AR33501; (66kW)	1351	07.94-12.96		
1.4 i.e. 16V T.S.	AR33503; AR38501; (76kW)	1370	12.96-01.01		
1.6 i.e.	AR33201; (76kW)	1596	10.94-12.96		
1.6 i.e. 16V T.S.	AR38201; AR67601; (88kW)	1598	12.96-01.01		
1.7 i.e. 16V	AR33401; (95kW)	1712	10.94-12.96		
1.8 i.e. 16V T.S.	AR38401; AR67106; (103kW)	1747	12.96-12.98		
1.8 i.e. 16V; 2.0 16V Quadrifoglio; 2.0 16V T.S.	AR32201; AR32301; AR67204; (106kW-114kW)	1747-1970	10.95-01.01		
1.9 JTD	AR32302; (77kW)	1910	02.99-01.01		
1.9 TD	AR33601; AR67501; (66kW)	1929	10.94-02.99		
146 (930)					
1.4 i.e.	AR33501; (66kW)	1351	12.94-12.96		
1.4 i.e. 16V T.S.	AR33503; AR38501; (76kW)	1370	11.96-01.01		
1.6 i.e.	AR33201; (76kW)	1596	12.94-12.96		
1.6 i.e. 16V T.S.	AR38201; AR67601; (88kW)	1598	11.96-01.01		
1.7 i.e. 16V	AR33401; (95kW)	1712	12.94-12.96		
1.8 i.e. 16V T.S.	AR38401; AR67106; (103kW)	1747	11.96-01.01		
1.8 i.e. 16V T.S.; 2.0 16V Quadrifoglio; 2.0 16V T.S.	AR32201; AR32301; AR67204; (106kW-114kW)	1747-1970	10.95-01.01		
1.9 JTD	AR32302; (77kW)	1910	02.99-01.01		
1.9 TD	AR33601; AR67501; (66kW)	1929	12.94-02.99		
147 (937)					
1.6 16V T.S.	AR32104; AR37203; (77kW-88kW)	1598	01.01-		
2.0 16V T.S.	AR32310; (110kW)	1970	01.01-		
3.2 GTA	932A.000; (184kW)	3179	02.03-		
1.9 JTD; 1.9 JTDM 16V	182B9.000; 937A2.000; (74kW-85kW)	1910	04.01-		
1.9 JTDM 8V	937A3.000; (88kW)	1910	07.05-		
1.9 JTD 16V	937A4.000; (93kW)	1910	09.03-09.04		
1.9 JTD 16V	192B1.000; (100kW)	1910	10.04-		
1.9 JTD 16V	192A5.000; (103kW)	1910	11.02-		
1.9 JTDM 16V	937A5.000; (110kW-125kW)	1910	07.05-		
155 (167)					
1.6 16V T.S.	AR67601; (88kW)	1598	05.96-12.97		
1.7 16V T.S.	AR67106; (103kW)	1747	05.96-12.97		
2.0 16V T.S.	AR67204; (110kW)	1970	03.95-12.97		
1.9 TD	AR67501; (66kW)	1929	04.93-12.97		
156 (932)					
1.6 16V T.S.	AR32102; AR32103; AR32104; AR67601; (88kW)	1598	09.97-05.06		
1.8 16V T.S.; 2.0 16V T.S.	AR32201; AR32205; AR32301; AR32310; (103kW-114kW)	1747-1970	09.97-05.06		
2.0	932A2.000; (119kW)	1970	03.02-05.06		
2.0 JTS	937A1.000; (122kW)	1970	03.02-05.06		
2.5 V6 24V; 3.2 GTA	932A.000; AR32401; AR32405; (140kW-184kW)	2492-3179	09.97-05.06		
1.9 JTD	AR32302; (77kW)	1910	09.97-10.00		
1.9 JTD	937A2.000; AR37101; (81kW-85kW)	1910	10.00-05.06		
1.9 D; 1.9 JTD 16V	192A5.000; 192B1.000; 937A4.000; (93kW-103kW)	1910	11.02-05.06		
1.9 D; 1.9 JTD; 1.9 JTD 16V Q4	937A5.000; (110kW)	1910	07.04-05.06		

RUVILLE YOUR PARTNER

Alfa Romeo

					8	265898					
					8	265898					265898: AR30586
					8	265898					
					8	265898					265898: AR30588
					8	265898					265898: AR30508; AR30588
					8	265898					265898: AR30588
					8	265898					265898: AR30508; AR30588
					8	266001					
					16	266005					
					8	266001					
					8	266001					266001: AR30755
					8	266001					
					16	266005					
					8	266001					
215601					16	265805					215601: AR33503, (ELV); 265805: AR33503
					8	266001					
215601					16	265805					215601: AR67601, (ELV), VET.→008440
					16	266005					
					16	265805					
215602					16	265805					215602:(ELV)
215603											215603:(ALV)
215804					8	265802					
					8	265802					
					8	266001					
215601					16	265805					215601: AR33503, (ELV); 265805: AR33503
					8	266001					
215601					16	265805					215601: AR67601, (ELV), VET.→008440
					16	266005					
					16	265805					265805: AR67106
215602					16	265805					215602:(ELV)
215603											215603:(ALV)
215804					8	265802					
					8	265802					
					16	265805					
215602					16	265805					215602:(ELV)
215603											215603:(ALV)
					24	266005					
216000					8	265802					
					8	265802					265802: 939A1.000
	16	235807			16	265809					235807: 4654872→; 265809: 4654872→
	16	235302			16	265809					235302: 5192517→
	16	235807									235807: →5192516
	16	235807			16	265809					235807: 4654872→; 265809: 4654872→
	16	235302			16	265809					235302: 5192517→
	16	235807									235807: →5192516
215601					16	265805					215601:(ELV), VET.→008440
					16	265805					
215602					16	265805					215602:(ELV)
215603											215603:(ALV)
					8	265802					
215601					16	265805					215601: AR67601, (ELV), VET.→008440; 265805: AR67601
215602					16	265805					215602:(ELV)
215603											215603:(ALV)
					16	265801					
					16	265805					
					24	266005					
					8	265802					
216000					8	265802					
	16	235807			16	265809					265809: 4654872→
	16	235302			16	265809					235302: 5192517→
	16	235807									235807: →5192516

Alfa Romeo

		cm³			
156 (932)					
2.4 JTD	839A6.000; 841C000; AR32501; (100kW-110kW)	2387	09.97-05.06		
2.4 D	841M.000; (120kW)	2387	06.03-05.06		
159					
1.8 TBi	939B1.000; (147kW)	1742	05.09-		
3.2 JTS; 3.2 JTS Q4	939A.000; (191kW)	3195	12.05-		
1.9 JTDM 8V	937A7.000; 939A1.000; 939A7.000; (85kW-88kW)	1910	09.05-		
1.9 JTDM 16V	937A8.000; 939A2.000; 939A8.000; (100kW-110kW)	1910	09.05-		
2.0 JTDM	939B3.000; (125kW)	1956	05.09-		
2.4 JTDM; 2.4 JTDM Q4	939A3.000; 939A9.000; (147kW-154kW)	2387	09.05-		
164 (164)					
2.0 V6 TURBO	AR64102; (148kW)	1996	09.92-09.98		
3.0 24V; 3.0 24V Q4; 3.0 24V QV	AR64304; AR64307; AR64308; AR66301; AR66302; (155kW-171kW)	2959	09.92-09.98		
166 (936)					
2.0 T.S.	AR34103; AR36301; (110kW-114kW)	1970	09.98-		
2.5 V6 24V; 3.0 V6 24V; 3.2 V6 24V	936A.000; AR34201; AR34301; AR36101; AR36201; (138kW-176kW)	2492-3179	09.98-		
2.4 JTD	839A6.000; 841C000; AR34202; (100kW-110kW)	2387	09.98-		
2.4 JTD	841G.000; 841H.000; (129kW)	2387	10.03-		
2.4 JTD	841M.000; (132kW)	2387	07.06-		
2.4 JTD	841M.000; 936B.000; (136kW)	2387	07.05-		
BRERA					
1.8 TBi	939B1.000; (147kW)	1742	05.09-		
3.2 JTS; 3.2 JTS Q4	939A.000; (191kW)	3195	01.06-		
2.0 JTDM	939B3.000; (125kW)	1956	05.09-		
2.4 JTDM 20V	939A3.000; 939A9.000; (147kW-154kW)	2387	01.06-		
GT (937C)					
1.8 TS	AR32205; (103kW)	1747	11.03-		
2.0 JTS	932A2.000; 937A1.000; (121kW)	1970	11.03-		
3.2 GTA	936A.000; (176kW)	3179	11.03-		
1.9 JTD	937A5.000; (110kW-125kW)	1910	11.03-		
GTV (916C_)					
1.8 16V; 2.0 16V; 2.0 16V T.S.	AR16201; AR32201; AR32301; AR32310; (106kW-114kW)	1747-1970	06.95-		
2.0 JTS	937A1.000; (121kW)	1970	04.03-		
3.0 V6 24V; 3.2 V6 24V	936A6.000; AR16102; AR16105; (160kW-176kW)	2959-3179	10.96-		
GUILIETTA (940)					
1.4 TB	198A4.000; (88kW)	1368	04.10-		
1.4 TB	940A2.000; (125kW)	1368	04.10-		
1.8 TBi	940A1.000; (173kW)	1742	04.10-		
1.6 JTDM; 2.0 JTDM	940A3.000; 940A4.000; (77kW-125kW)	1598-1956	04.10-		
MITO					
1.4	199A1.000; 199A6.000; 955A1.000; (58kW-88kW)	1368	09.08-		
1.4 TB	(99kW)	1368	10.09-		
1.4 TB; 1.4 Turbo	198A1.000; 199A8.000; (110kW-114kW)	1368	09.08-		
1.4 TB	940A2.000; (125kW)	1368	10.09-		
1.3 JTDM	199A3.000; (66kW-70kW)	1248	09.08-		
1.6 JTDM	198A2.000; 955A4.000; (85kW-88kW)	1598	09.08-		
SPIDER					
1.8 TBi	939B1.000; (147kW)	1742	05.09-		
3.2 JTS; 3.2 JTS Q4	939A.000; (191kW)	3195	09.06-		
2.0 JTDM	939B3.000; (125kW)	1956	05.09-		
2.4 JTDM	939A3.000; (147kW-154kW)	2387	04.07-		
SPIDER (916S_)					
1.8 16V; 2.0 T.S. 16V	AR16201; AR32201; AR32301; AR32310; (106kW-114kW)	1747-1970	06.95-04.05		
2.0 JTS	937A1.000; (121kW)	1970	04.03-04.05		
3.0 V6; 3.0 V6 24V; 3.2 V6 24V	936A6.000; AR16102; AR16105; (160kW-176kW)	2959-3179	01.99-04.05		

Audi

50 (86)					
1.1	HB; HC; (37kW-44kW)	1093	08.74-07.78		

RUVILLE YOUR PARTNER

Alfa Romeo → Audi

					10	265802					
	20	235807			20	265809					
	16	235801			16	265809					
	24	235301			12	265330					265330:(ALV)
					12	266002					266002:(ELV)
216000					8	265802					
	16	235302			16	265809					235302: 5192517→; 265809: 4654872→
	16	235807									235807: 4654872-5192516
	16	235302			16	265809					235302: 939B3000; 265809: 939B3000
	20	235302			20	265809					
					12	265802					
					24	266005					
215602					16	265805					215602:(ELV)
215603											215603:(ALV)
					24	266005					
					10	265802					
	20	235807			20	265809					
	20	235807			20	265809					235807: 841M.000
	20	235302			20	265809					235302: 936B.000
	20	235807									235807: 841M.000
	16	235801			16	265809					
	24	235301			12	265330					265330:(ALV)
					12	266002					266002:(ELV)
	16	235302			16	265809					
	20	235302			20	265809					
215602					16	265805					215602:(ELV)
215603											215603:(ALV)
					16	265801					
					24	266005					
	16	235302			16	265809					235302: 5192517→
	16	235807									235807: →5192516
215602					16	265805					215602:(ELV)
215603											215603:(ALV)
					16	265805					
					24	266005					
					16	265812					
	4	235802			8	265812					235802:(ELV)
	16	235801			16	265809					
	16	235302			16	265809					
					16	265812					
	4	235802			8	265814					235802: 955A2.000, (ELV); 265814: 955A2.000
					16	265812					
	4	235802			8	265814					235802:(ELV)
	16	235809			16	265809					
	16	235302			16	265809					
	16	235801			16	265809					
	24	235301			12	265330					265330:(ALV)
					12	266002					266002:(ELV)
	16	235302			16	265809					
	20	235302			20	265809					
215602					16	265805					215602:(ELV)
215603											215603:(ALV)
					16	265805					
					24	266005					
									1	295405(N)	

		cm³			

Audi

50 (86)					
1.1	HB; HC; (37kW-44kW)	1093	08.74-07.78		
1.3	HJ; (43kW)	1272	01.77-07.78		
1.3	HH; (44kW)	1272	08.77-07.78		
80 (80,82,B1)					
1.3	ZA; ZF; (40kW-44kW)	1297	05.72-07.78		
1.5	YJ; ZB; (55kW)	1471	05.72-08.75		
1.5; 1.6 GT	XX; ZC; (63kW-74kW)	1471-1584	05.72-07.76		
1.6	YN; YP; (55kW-63kW)	1588	09.75-07.78		
1.6 GTE	YS; (81kW)	1588	01.76-07.78		
80 (81,85,B2)					
1.3	FY; (40kW)	1272	09.78-07.81		
1.3	FZ; (44kW)	1272	09.78-07.81		
1.3	EP; (44kW)	1297	09.78-07.86		
1.6	YT; YY; (51kW)	1588	08.78-07.81		
1.6	WV; YN; (55kW)	1588	08.78-07.86		
1.6	YP; (63kW)	1588	08.78-02.83		
1.6 GLE	YZ; (81kW)	1588	01.79-12.86		
1.6	SA; (54kW)	1595	02.86-07.86		
1.6	DT; (55kW)	1595	08.78-07.86		
1.8	SF; (65kW)	1781	02.86-07.86		
1.8	DS; (66kW)	1781	01.83-08.86		
1.8 CC	JV; NE; (66kW)	1781	08.84-08.86		
1.8; 1.8 CC	JN; (68kW)	1781	08.83-08.86		

RUVILLE YOUR PARTNER

Audi

									1	295404(K)	295404(K):(GS)
									1	295405(K)	295405(K):(ST)
									1	295406(K)	295406(K):(GS), (mG)
									1	295404(K)	295404(K):(GS)
									1	295405(K)	295405(K):(ST)
									1	295406(K)	295406(K):(GS), (mG)
									1	295405(N)	
									1	295404(K)	295404(K):(GS)
									1	295405(K)	295405(K):(ST)
									1	295406(K)	295406(K):(GS), (mG)
					8	265430			1	295405(N)	
									1	295404(K)	295404(K):(GS)
									1	295405(K)	295405(K):(ST)
									1	295406(K)	295406(K):(GS), (mG)
					8	265430			1	295405(N)	295405(N): YJ, ZB, →ZB0203000, YJ0000001→
									1	295404(K)	295404(K):(GS), YJ, ZB, →ZB0203000, YJ0000001→
									1	295405(K)	295405(K):(ST), YJ, ZB, →ZB0203000, YJ0000001→
									1	295406(K)	295406(K):(GS), YJ, ZB, →ZB0203000, YJ0000001→, (mG)
					8	265430			1	295405(N)	
									1	295404(K)	295404(K):(GS)
									1	295405(K)	295405(K):(ST)
									1	295406(K)	295406(K):(GS), (mG)
215410					8	265430			1	295405(N)	
									1	295404(K)	295404(K):(GS)
									1	295405(K)	295405(K):(ST)
									1	295406(K)	295406(K):(GS), (mG)
					8	265430			1	295405(N)	
									1	295404(K)	295404(K):(GS)
									1	295405(K)	295405(K):(ST)
									1	295406(K)	295406(K):(GS), (mG)
									1	295405(N)	
									1	295404(K)	295404(K):(GS)
									1	295405(K)	295405(K):(ST)
									1	295406(K)	295406(K):(GS), (mG)
									1	295405(N)	
					8	265430			1	295405(N)	295405(N): EP
									1	295404(K)	295404(K):(GS)
									1	295405(K)	295405(K):(ST)
									1	295406(K)	295406(K):(GS), (mG)
									1	295404(K)	295404(K):(GS)
									1	295405(K)	295405(K):(ST)
									1	295406(K)	295406(K):(GS), (mG)
215410					8	265430			1	295405(N)	
215410					8	265430			1	295405(N)	
									1	295404(K)	295404(K):(GS)
									1	295405(K)	295405(K):(ST)
									1	295406(K)	295406(K):(GS), (mG)
					8	265430			1	295405(N)	
									1	295404(K)	295404(K):(GS)
									1	295405(K)	295405(K):(ST)
									1	295406(K)	295406(K):(GS), (mG)
215425					8	265426			1	295405(N)	
									1	295404(K)	295404(K):(GS)
									1	295405(K)	295405(K):(ST)
									1	295406(K)	295406(K):(GS), (mG)
215425					8	265430			1	295405(N)	
									1	295404(K)	295404(K):(GS)
									1	295405(K)	295405(K):(ST)
									1	295406(K)	295406(K):(GS), (mG)
					8	265426			1	295405(N)	
									1	295404(K)	295404(K):(GS)
									1	295405(K)	295405(K):(ST)
									1	295406(K)	295406(K):(GS), (mG)
					8	265430			1	295405(N)	
									1	295404(K)	295404(K):(GS)
									1	295405(K)	295405(K):(ST)
									1	295406(K)	295406(K):(GS), (mG)
					8	265426			1	295405(N)	
									1	295404(K)	295404(K):(GS)
									1	295405(K)	295405(K):(ST)
									1	295406(K)	295406(K):(GS), (mG)
					8	265426 [1]			1	295405(N)	265430: →F#220000; 265426: G#000001→

1 siehe Klappseite vorn • see fold in front.

		cm³			

Audi

80 (81,85,B2)					
1.8; 1.8 CC	JN; (68kW)	1781	08.83-08.86		
1.8 GTE	PV; (81kW)	1781	03.85-08.86		
1.8 GTE	DZ; (82kW)	1781	08.84-08.86		
1.9 CD-5S	WN; (85kW)	1921	09.81-07.83		
2.0	HP; JS; (85kW)	1994	10.83-09.84		
2.2	WE; (85kW)	2144	10.80-07.83		
2.2	KL; (96kW)	2144	08.82-07.84		
2.2	KK; (100kW)	2144	08.82-07.84		
1.6 D; 1.6 TD	CR; CY; JK; (40kW-51kW)	1588	08.80-08.86	225401	
80 (89,89Q,8A,B3)					
1.6; 1.8	PP; RN; RU; (51kW-55kW)	1595-1781	09.86-09.91		
1.8 S	JN; NE; PM; SF; (65kW-66kW)	1781	09.86-10.91		
1.8 E	DZ; (82kW)	1781	06.86-08.91		
1.8; 2.0; 2.0 E	3A; AAD; SD; (82kW-85kW)	1847-1984	09.86-08.91		
2.0 E 16V	6A; (101kW)	1984	03.90-09.91		
1.6 D	JK; (40kW)	1588	09.86-08.91	225401	
1.6 TD	RA; SB; (59kW)	1588	09.86-08.91		
1.9 D	1Y; (50kW)	1896	08.89-08.91	225419	
80 (8C,B4)					
1.6	ABM; (52kW)	1595	09.91-12.94		
1.6 E	ADA; (74kW)	1595	06.93-01.96		
2.0	ABT; (66kW)	1984	09.91-01.96		

RUVILLE YOUR PARTNER

Audi

									1	295404(K)	295404(K):(GS)
									1	295405(K)	295405(K):(ST)
									1	295406(K)	295406(K):(GS), (mG)
					8	265426			1	295405(N)	
									1	295404(K)	295404(K):(GS)
									1	295405(K)	295405(K):(ST)
									1	295406(K)	295406(K):(GS), (mG)
					8	265430			1	295405(N)	
									1	295404(K)	295404(K):(GS)
									1	295405(K)	295405(K):(ST)
									1	295406(K)	295406(K):(GS), (mG)
					8	265430			1	295405(N)	
									1	295404(K)	295404(K):(GS)
									1	295406(K)	295406(K):(GS), (mG)
					8	265426 [1]			1	295405(N)	265430: →F#220000; 265426: G#000001→
									1	295404(K)	295404(K):(GS)
									1	295406(K)	295406(K):(GS), (mG)
					8	265430			1	295405(N)	265430:{S}, {CZ}; 295405(N):{S}, {CZ}
									1	295404(K)	295404(K):(GS)
									1	295406(K)	295406(K):(GS), (mG)
					10	265430			1	295405(N)	
					8	265430			1	295405(N)	
									1	295404(K)	295404(K):(GS)
									1	295406(K)	295406(K):(GS), (mG)
215420					8	265430			1	295405(N)	225401: →F#220000; 215420: →F#220000
									1	295404(K)	295404(K):(GS)
									1	295405(K)	295405(K):(ST)
									1	295406(K)	295406(K):(GS), (mG)
215425					8	265426			1	295405(N)	
									1	295404(K)	295404(K):(GS)
									1	295405(K)	295405(K):(ST)
									1	295406(K)	295406(K):(GS), (mG)
					8	265426			1	295405(N)	
									1	295404(K)	295404(K):(GS)
									1	295405(K)	295405(K):(ST)
									1	295406(K)	295406(K):(GS), (mG)
					8	265430			1	295405(N)	
									1	295404(K)	295404(K):(GS)
									1	295405(K)	295405(K):(ST)
									1	295406(K)	295406(K):(GS), (mG)
					8	265426			1	295405(N)	
									1	295404(K)	295404(K):(GS)
									1	295405(K)	295405(K):(ST)
									1	295406(K)	295406(K):(GS), (mG)
					16	265426			1	295405(N)	
									1	295404(K)	295404(K):(GS)
									1	295405(K)	295405(K):(ST)
									1	295406(K)	295406(K):(GS), (mG)
215420					8	265430			1	295405(N)	225401: →F#220000; 215420: →F#220000
									1	295404(K)	295404(K):(GS)
									1	295405(K)	295405(K):(ST)
									1	295406(K)	295406(K):(GS), (mG)
215480					8	265426			1	295405(N)	
									1	295404(K)	295404(K):(GS)
									1	295405(K)	295405(K):(ST)
									1	295406(K)	295406(K):(GS), (mG)
215419					8	265426			1	295405(N)	
									1	295404(K)	295404(K):(GS)
									1	295405(K)	295405(K):(ST)
									1	295406(K)	295406(K):(GS), (mG)
215425					8	265426			1	295405(N)	
									1	295404(K)	295404(K):(GS)
									1	295405(K)	295405(K):(ST)
									1	295406(K)	295406(K):(GS), (mG)
					8	265426			1	295405(N)	265426: →034669; 295405(N): →034669
									1	295404(K)	295404(K):(GS)
									1	295405(K)	295405(K):(ST)
									1	295406(K)	295406(K):(GS), (mG)
					8	265426			1	295405(N)	265426: →246861
					8	265427			1	295404(K)	265427: 246862→; 295404(K):(GS)
									1	295405(K)	295405(K):(ST)
									1	295406(K)	295406(K):(GS), (mG)

1 siehe Klappseite vorn • see fold in front.

		cm³			
Audi					
80 (8C,B4)					
2.0 E	ABK; (85kW)	1984	09.91-01.96		
2.0 E 16V	ACE; (103kW)	1984	04.92-01.96		
RS2 (P1); S2	ABY; ADU; (169kW-232kW)	2226	02.93-07.95		
2.3 E	NG; (98kW)	2309	09.91-01.96		
2.6; 2.8	AAH; ABC; (110kW-128kW)	2598-2771	09.91-01.96		
1.9 TD	AAZ; (55kW)	1896	09.91-12.94	225419	
1.9 TDI	1Z; (66kW)	1896	09.91-01.96	225403 225404	
90 (81,85,B2)					
2.0	SK; (83kW)	1994	03.86-03.87		
2.0	HP; JS; (85kW)	1994	10.84-03.87		
2.2; 2.2 E	HY; JT; KV; KX; (85kW-100kW)	2226-2229	10.84-03.87		
1.6 TD	CY; (51kW)	1588	10.85-01.87	225401	
90 (89,89Q,8A,B3)					
2.0	PS; (85kW)	1994	07.88-09.91		
2.0 20V	NM; (118kW)	1994	08.88-09.91		
2.2 E; 2.3 E	KV; NG; (98kW-100kW)	2226-2309	04.87-09.91		
2.3 E 20V	7A; (123kW-125kW)	2309	06.88-09.91		
1.6 TD	RA; SB; (59kW)	1588	04.87-09.91		
100 (43,C2)					
1.6	YV; (63kW)	1588	08.76-02.83		
1.9; 2.1	WB; WE; WH; (74kW-85kW)	1921-2144	07.77-02.83		
2.1	WC; WG; (100kW)	2144	03.77-02.83		
2.0 D	CN; (51kW)	1986	08.78-02.83		
100 (44,44Q,C3)					
1.8	DR; RS; (55kW)	1781	08.82-12.87		

RUVILLE YOUR PARTNER

Audi

					8	265426			1	295405(N)	265426: →245263
					8	265427			1	295404(K)	265427: 245264→; 295404(K):(GS)
									1	295405(K)	295405(K):(ST)
									1	295406(K)	295406(K):(GS), (mG)
					16	265426			1	295405(N)	
									1	295404(K)	295404(K):(GS)
									1	295405(K)	295405(K):(ST)
									1	295406(K)	295406(K):(GS), (mG)
					20	265426			1	295405(N)	
									1	295404(K)	295404(K):(GS)
									1	295406(K)	295406(K):(GS), (mG)
					10	265426			1	295405(N)	
									1	295404(K)	295404(K):(GS)
									1	295406(K)	295406(K):(GS), (mG)
					12	265426			1	295405(N)	
									1	295404(K)	295404(K):(GS)
									1	295406(K)	295406(K):(GS), (mG)
215419					8	265426			1	295405(N)	
									1	295404(K)	295404(K):(GS)
									1	295405(K)	295405(K):(ST)
									1	295406(K)	295406(K):(GS), (mG)
215409					8	265426			1	295405(N)	225403:09.94→; 215409:09.94→
215411									1	295404(K)	225404:→08.94; 215411:→08.94; 295404(K):(GS)
									1	295405(K)	295405(K):(ST)
									1	295406(K)	295406(K):(GS), (mG)
					10	265426			1	295405(N)	
									1	295404(K)	295404(K):(GS)
									1	295406(K)	295406(K):(GS), (mG)
					8	265426 [1]			1	295405(N)	265430: →F#220000; 265426: G#000001→
									1	295404(K)	295404(K):(GS)
									1	295406(K)	295406(K):(GS), (mG)
					10	265426			1	295405(N)	
									1	295404(K)	295404(K):(GS)
									1	295406(K)	295406(K):(GS), (mG)
215420					8	265430			1	295405(N)	
									1	295404(K)	295404(K):(GS)
									1	295405(K)	295405(K):(ST)
									1	295406(K)	295406(K):(GS), (mG)
					10	265426			1	295405(N)	
									1	295404(K)	295404(K):(GS)
									1	295406(K)	295406(K):(GS), (mG)
					20	265426					
					10	265426			1	295405(N)	
									1	295404(K)	295404(K):(GS)
									1	295406(K)	295406(K):(GS), (mG)
					20	265426			1	295405(N)	
									1	295404(K)	295404(K):(GS)
									1	295406(K)	295406(K):(GS), (mG)
215480					8	265426			1	295405(N)	
									1	295404(K)	295404(K):(GS)
									1	295405(K)	295405(K):(ST)
									1	295406(K)	295406(K):(GS), (mG)
215410					8	265430			1	295405(N)	
									1	295404(K)	295404(K):(GS)
									1	295405(K)	295405(K):(ST)
									1	295406(K)	295406(K):(GS), (mG)
					10	265430			1	295405(N)	
									1	295404(K)	295404(K):(GS)
									1	295406(K)	295406(K):(GS), (mG)
					10	265430			1	295405(N)	
									1	295404(K)	295404(K):(GS), WC
									1	295406(K)	295406(K):(GS), WC, (mG)
215415					10	265430			1	295405(N)	
									1	295404(K)	295404(K):(GS)
									1	295406(K)	295406(K):(GS), (mG)
215425					8	265426 [1]			1	295405(N)	215425: RS; 265430: DR; 265426: RS
									1	295404(K)	295404(K):(GS)
									1	295405(K)	295405(K):(ST)
									1	295406(K)	295406(K):(GS), (mG)

1 siehe Klappseite vorn • see fold in front.

		cm³			

Audi

100 (44,44Q,C3)					
1.8	SH; (65kW)	1781	02.86-07.90		
1.8	DS; JW; NP; (66kW)	1781	08.83-07.89		
1.8	4B; PH; (66kW)	1781	03.85-11.90		
1.9	WH; (74kW)	1921	08.82-07.84		
2.0	SL; (83kW)	1994	08.86-11.87		
2.0; 2.0 E	KP; (85kW)	1994	08.84-12.87		
2.0; 2.0 E	RT; (85kW)	1994	01.88-11.90		
2.1	WC; (100kW)	2144	08.82-07.84		
2.2	KZ; (85kW)	2226	10.84-09.86		
2.2 E	PX; (88kW)	2226	08.85-07.86		
2.2; 2.2 E TURBO; 2.2 TURBO; 2.3; 2.3 E	AAR; HX; KU; MC; NF; (98kW-121kW)	2226-2309	08.84-11.90		
2.0 D; 2.0 D TURBO; 2.0 TD	CN; DE; (51kW-64kW)	1986	08.82-11.90		
2.0 D TURBO; 2.0 TD; 2.4 D	3D; NC; (60kW-74kW)	1986-2370	03.88-07.91		
2.5 TDI	1T; (88kW)	2461	01.90-11.90		
100 (4A,C4)					
2.0; 2.0 E	AAE; (74kW)	1984	12.90-06.94		
2.0 E	AAD; ABK; (85kW)	1984	12.90-06.94		
2.0 E 16V	ACE; (103kW)	1984	01.92-06.94		
S4 TURBO	AAN; (169kW)	2226	08.91-06.94		
2.3 E	AAR; (98kW)	2309	12.90-06.94		
2.6; 2.6 E	ACZ; (102kW)	2598	07.93-07.94		
2.6; 2.8 E	AAH; ABC; (110kW-128kW)	2598-2771	12.90-06.94		
S4 V8	ABH; (206kW)	4172	10.92-06.94		
S4 V8	AEC; (213kW)	4172	03.94-06.94		
2.4 D	AAS; (60kW)	2370	12.90-06.94		

RUVILLE YOUR PARTNER

Audi

					8	265426 [1]			1	295405(N)	265430: →F#300000; 265426: G#000001→
									1	295404(K)	295404(K):(GS)
									1	295405(K)	295405(K):(ST)
									1	295406(K)	295406(K):(GS), (mG)
					8	265426 [1]			1	295405(N)	265430: →F#000001; 265426: G#000001→
									1	295404(K)	295404(K):(GS)
									1	295405(K)	295405(K):(ST)
									1	295406(K)	295406(K):(GS), (mG)
					8	265426			1	295405(N)	
									1	295404(K)	295404(K):(GS)
									1	295405(K)	295405(K):(ST)
									1	295406(K)	295406(K):(GS), (mG)
					10	265430			1	295405(N)	
									1	295404(K)	295404(K):(GS)
									1	295406(K)	295406(K):(GS), (mG)
					10	265426			1	295405(N)	
									1	295404(K)	295404(K):(GS)
									1	295406(K)	295406(K):(GS), (mG)
					10	265426 [1]			1	295405(N)	265430: →F#300000; 265426: G#000001→
									1	295404(K)	295404(K):(GS)
									1	295406(K)	295406(K):(GS), (mG)
					10	265426			1	295405(N)	
									1	295404(K)	295404(K):(GS)
									1	295406(K)	295406(K):(GS), (mG)
					10	265430			1	295405(N)	
									1	295404(K)	295404(K):(GS)
									1	295406(K)	295406(K):(GS), (mG)
					10	265426			1	295405(N)	
									1	295404(K)	295404(K):(GS)
									1	295406(K)	295406(K):(GS), (mG)
					8	265426			1	295405(N)	
									1	295404(K)	295404(K):(GS)
									1	295406(K)	295406(K):(GS), (mG)
					10	265426			1	295405(N)	
									1	295404(K)	295404(K):(GS)
									1	295406(K)	295406(K):(GS), (mG)
215415					10	265430			1	295405(N)	
									1	295404(K)	295404(K):(GS)
									1	295406(K)	295406(K):(GS), (mG)
215415					10	265426			1	295405(N)	
									1	295404(K)	295404(K):(GS)
									1	295406(K)	295406(K):(GS), (mG)
215702					10	265426			1	295405(N)	
									1	295404(K)	295404(K):(GS)
									1	295406(K)	295406(K):(GS), (mG)
					8	265426			1	295405(N)	265426: →032209
					8	265427			1	295404(K)	265427: 032210→; 295404(K):(GS)
									1	295405(K)	295405(K):(ST)
									1	295406(K)	295406(K):(GS), (mG)
					8	265426			1	295405(N)	
									1	295404(K)	295404(K):(GS)
									1	295405(K)	295405(K):(ST)
									1	295406(K)	295406(K):(GS), (mG)
					16	265426			1	295405(N)	
									1	295404(K)	295404(K):(GS)
									1	295405(K)	295405(K):(ST)
									1	295406(K)	295406(K):(GS), (mG)
					20	265426			1	295405(N)	
									1	295404(K)	295404(K):(GS)
									1	295406(K)	295406(K):(GS), (mG)
					10	265426			1	295405(N)	
									1	295404(K)	295404(K):(GS)
									1	295406(K)	295406(K):(GS), (mG)
					12	265426					265426: →S#026714
					12	265427					265427: S#026715→
					12	265426			1	295405(N)	265426: →S#026714
					12	265427			1	295404(K)	265427: S#026715→; 295404(K):(GS)
									1	295406(K)	295406(K):(GS), (mG)
					32	265705			1	295405(N)	
					32	265705			2	295405(N)	265705: T#073947→
215415					10	265426			1	295405(N)	
									1	295404(K)	295404(K):(GS)
									1	295406(K)	295406(K):(GS), (mG)

1 siehe Klappseite vorn • see fold in front.

		cm³			

Audi

100 (4A,C4)					
2.5 TDI	AAT; ABP; (85kW)	2461	12.90-06.94	225702	
200 (43)					
2.1 5 E; 2.1 5 T	WC; WJ; (100kW-125kW)	2144	10.79-09.82		
200 (44,44Q)					
2.1 5 E; 2.1 TURBO	KG; WC; (100kW-134kW)	2144	08.83-01.88		
2.2; 2.2 TURBO	1B; 2B; KU; MC; (101kW-147kW)	2226	09.83-12.91		
2.2 20V	3B; (162kW)	2226	03.89-12.90		
2.3	NF; (100kW)	2309	11.86-09.91		
A1					
1.2 TFSI	(63kW)	1197	05.10-		
1.4 TFSI	(90kW)	1390	05.10-		
1.6 TDI	(77kW)	1598	05.10-		
A2 (8Z0)					
1.4	AUA; BBY; (55kW)	1390	02.00-08.05		
1.6 FSI	BAD; (81kW)	1598	05.02-08.05		
1.2 TDI	ANY; (45kW)	1191	03.01-08.05		
1.4 TDI	AMF; BHC; (55kW)	1422	02.00-08.05		
1.4 TDI	ATL; (66kW)	1422	11.03-08.05		
A3					
1.2 TSI	CBZB; (77kW)	1197	03.10-		
1.6	BSE; (74kW-75kW)	1595	08.08-		
1.8 TFSI; 2.0 TFSI	BZB; CAWB; CBFA; CCZA; CDAA; (118kW-147kW)	1798-1984	04.08-		
1.6 TDI	CAYC; (77kW)	1598	05.09-		
1.9 TDI	BLS; (77kW)	1896	04.08-		
2.0 TDI	CBAA; CBAB; (100kW-103kW)	1968	04.08-		
A3 (8L1)					
1.6	AEH; AKL; APF; (74kW)	1595	09.96-08.00		
1.6	AVU; BFQ; (75kW)	1595	08.00-		
1.8; 1.8 T	AGN; AGU; AJQ; APG; APP; AQA; ARX; ARY; ARZ; AUM; AUQ; (92kW-132kW)	1781	09.96-		
S3	AMK; APY; AUL; BAM; (154kW-165kW)	1781	03.99-		
1.9 TDI	AGR; ALH; (66kW)	1896	09.96-07.01		
1.9 TDI	ATD; AXR; (74kW)	1896	10.00-		
1.9 TDI	AHF; ASV; (81kW)	1896	08.97-07.01		
1.9 TDI	ASZ; (96kW)	1896	08.00-		
A3 (8P1, 8PA)					
1.2 TSI	CBZB; (77kW)	1197	04.10-		
1.4 TFSI	CAXC; (92kW)	1390	09.07-		
1.6	BGU; BSE; BSF; CCSA; (75kW)	1595	05.03-		
1.6 FSI	BAG; BLF; BLP; (85kW)	1598	08.03-		
1.8 TFSI	BYT; BZB; CDAA; (118kW)	1798	11.06-		
2.0 FSI	AXW; BLR; BLX; BLY; BMB; BVY; BVZ; (110kW)	1984	05.03-		
2.0 TFSI	AXX; BPY; BWA; CAWB; CCZA; (147kW)	1984	09.04-		
S3	BZC; CDLC; (188kW)	1984	02.07-		

RUVILLE YOUR PARTNER

Audi

215702					10	265426			1	295405(N)	
									1	295404(K)	295404(K):(GS)
									1	295406(K)	295406(K):(GS), (mG)
					10	265430			1	295405(N)	
									1	295404(K)	295404(K):(GS)
									1	295406(K)	295406(K):(GS), (mG)
					10	265430			1	295405(N)	
									1	295404(K)	295404(K):(GS)
									1	295406(K)	295406(K):(GS), (mG)
					10	265426			1	295405(N)	
									1	295404(K)	295404(K):(GS)
									1	295406(K)	295406(K):(GS), (mG)
					20	265426			1	295405(N)	
									1	295404(K)	295404(K):(GS)
									1	295406(K)	295406(K):(GS), (mG)
					10	265426			1	295405(N)	
									1	295404(K)	295404(K):(GS)
									1	295406(K)	295406(K):(GS), (mG)
					8	265402					265402: CBZA
	16	235404			16	265402					235404: CAXA; 265402: CAXA
	16	235406			16	265404					235406: CAYC; 265404: CAYC
	16	235410			16	265402			1	295402(N)	295402(N): AUA
	16	235400 [6]									
	16	235410			16	265402					
	16	235400 [6]									
					6	265403			1	295401(N)	
215406					6	265403			1	295401(N)	
									1	295404(K)	295404(K):(GS)
									1	295406(K)	295406(K):(GS), (mG)
215406					6	265403					
					8	265402					
	8	235409			8	265707					
	16	235700			16	265707					
	16	235406			16	265404					
215404					8	265403					
	16	235406			16	265404					
215424					8	265427			1	295401(N)	
	8	235409			8	265165			1	295401(N)	
	8	235402 [6]									
					12	265704			2	295401(N)	265704:(ELV)
					8	265705					265705:(ALV)
					12	265704					265704:(ELV)
					8	265705					265705:(ALV)
215402					8	265426			1	295405(N)	215402: AGR, 034859→; 265426: AGR, →034858
					8	265427					215402: ALH; 265427: AGR, 034859→
											265427: ALH
215404					8	265401			1	295401(N)	
215402					8	265426			1	295405(N)	215402: AHF, 003189→; 265426: AHF, →003188
					8	265427					215402: ASV; 265427: AHF, 003189→
											265427: ASV
215404					8	265401			1	295401(N)	
					8	265402					
	16	235404			16	265402					
	8	235409			8	265165			1	295401(N)	265165: →7#150000
	8	235402 [6]			8	265707					235402: →7#150000; 265707: 7#150001→
	16	235404			16	265402					235404: BLP; BLF
	16	235410									235410: BAG
	16	235400 [6]									235400: BAG
	16	235700			16	265707					
	16	235408			16	265165					265165: →7#150000
					16	265707					265707: 7#150001→
	16	235408			16	265707					235408: AXX; BWA; BPY
	16	235700									235700: CAWB; CCZA
	24	235408			24	265707					

6 siehe Klappseite vorn • see fold in front.

		cm³			
Audi					
A3 (8P1, 8PA)					
S3	BHZ; CDLA; (195kW)	1984	11.06-		
3.2	BDB; BMJ; BUB; (184kW)	3189	07.03-		
1.6 TDI	CAYB; CAYC; (66kW-77kW)	1598	05.09-		
1.9 TDI	BKC; BLS; (77kW)	1896	05.03-		
2.0 TDI	AZV; CBAA; (100kW)	1968	05.03-		
2.0 TDI	BKD; CBAB; (103kW)	1968	05.03-		
2.0 TDI	BMM; (103kW)	1968	06.05-		
2.0 TDI	BMN; CBBB; (125kW)	1968	03.06-		
A4 (8D2,8D5,B5)					
1.6	ADP; AHL; ANA; ARM; (74kW)	1595	01.95-07.00		
1.6	ALZ; (75kW)	1595	07.00-09.01		
1.8	AFY; (85kW)	1781	04.95-09.01		
1.8	ADR; APT; ARG; AVV; (92kW)	1781	01.95-09.01		
1.8 T	AEB; ANB; APU; ARK; AWT; (110kW)	1781	01.95-09.01		
1.8 T	AJL; (132kW)	1781	12.97-09.01		
2.4	AGA; AJG; ALF; AML; AMM; APS; APZ; ARJ; (120kW-121kW)	2393	03.97-09.01		
2.6	ACZ; (102kW)	2598	01.96-07.97		
2.6	ABC; (110kW)	2598	01.95-09.01		
2.7 Turbo; S4	AGB; AJK; AZB; (169kW-195kW)	2671	09.97-09.01		
2.8	AAH; (128kW)	2771	01.95-07.97		
2.8	ATX; (140kW)	2771	03.99-09.00		
2.8	ACK; ALG; AMX; APR; AQD; (142kW)	2771	10.96-09.01		
1.9 TDI	AFF; (55kW)	1896	12.95-09.01	225403	
1.9 DUO; 1.9 TDI	1Z; AHH; AHU; (66kW)	1896	01.95-09.01	225403	
1.9 TDI	AFN; AVG; (81kW)	1896	10.95-09.01	225403	
1.9 TDI	AJM; ATJ; (85kW)	1896	03.00-09.01		
2.5 TDI	AFB; AKN; (110kW)	2496	09.97-09.01	225411	
2.5 D	AKE; (132kW)	2496	10.00-05.03	225411	

RUVILLE YOUR PARTNER

Audi

	16	235408			16	265707					
	24	235701			24	265703					
	16	235406			16	265404					
215404					8	265403					
215421	16	235406			16	265404					215421: AZV, (ELV); 235406: CFFA; CBAA; 265404: CFFA; CBAA
215422											215422: AZV, (ALV)
215421	16	235406			16	265404					215421: BKD, (ELV); 235406: CBAB; CFFB; CLJA; 265404: CBAB; CFFB; CLJA
215422											215422: BKD, (ALV)
					8	265403					
215421	16	235406			16	265404					215421: BMN, (ELV); 235406: CFGB; CBBB; 265404: CFGB; CBBB
215423											215423: BMN, (ALV)
215424					8	265427			1	295401(N)	295401(N): AHL, ANA, ARM
									1	295405(N)	295405(N): ADP
									1	295404(K)	295404(K):(GS), ADP
									1	295406(K)	295406(K):(GS), ADP, (mG)
	8	235409			8	265165			1	295401(N)	
	8	235402 [6]									
					12	265704			1	295405(N)	265704:(ELV)
					8	265705			1	295404(K)	265705:(ALV); 295404(K):(GS)
									1	295405(K)	295405(K):(ST)
									1	295406(K)	295406(K):(GS), (mG)
					12	265704			2	295401(N)	265704:(ELV); 295401(N): APT, ARG, AVV
					8	265705			1	295405(N)	265705:(ALV); 295405(N): ADR
									1	295401(K)	295401(K):(ST), APT, ARG, AVV
									1	295404(K)	295404(K):(GS), ADR
									1	295405(K)	295405(K):(ST), ADR
									1	295406(K)	295406(K):(GS), ADR, (mG)
					12	265704			2	295401(N)	265704:(ELV); 295401(N): ANB, APU, AWT
					8	265705			1	295405(N)	265705:(ALV); 295405(N): AEB, ARK
									1	295401(K)	295401(K):(ST), ANB, APU
									1	295404(K)	295404(K):(GS), AEB, ARK
									1	295405(K)	295405(K):(ST), AEB, ARK
									1	295406(K)	295406(K):(GS), AEB, ARK, (mG)
					12	265704			1	295405(N)	265704:(ELV)
					8	265705			1	295405(K)	265705:(ALV); 295405(K):(ST)
					18	265704			4	295405(N)	265704:(ELV)
					12	265705					265705:(ALV)
					12	265427					
					12	265427			1	295405(N)	
									1	295404(K)	295404(K):(GS)
									1	295406(K)	295406(K):(GS), (mG)
					18	265704			4	295405(N)	265704:(ELV)
					12	265705					265705:(ALV)
					12	265427			1	295405(N)	
									1	295404(K)	295404(K):(GS)
									1	295406(K)	295406(K):(GS), (mG)
					18	265704					265704:(ELV)
					12	265705					265705:(ALV)
					18	265704			4	295405(N)	265704:(ELV); 295405(N): ALG, AMX, APR, AQD
					12	265705					265705:(ALV)
215409					8	265426			1	295405(N)	
									1	295404(K)	295404(K):(GS)
									1	295405(K)	295405(K):(ST)
									1	295406(K)	295406(K):(GS), (mG)
215409					8	265426			1	295405(N)	
									1	295404(K)	295404(K):(GS), 1Z; AHU
									1	295405(K)	295405(K):(ST)
									1	295406(K)	295406(K):(GS), 1Z; AHU, (mG)
215409					8	265426			1	295405(N)	225403: AFN; 215409: AFN
									1	295404(K)	295404(K):(GS), AFN, →576000
									1	295405(K)	295405(K):(ST)
									1	295406(K)	295406(K):(GS), AFN, →576000, (mG)
215404					8	265403			1	295401(N)	215404: AJM; 265403: AJM
215407	24	235405			24	265702			2	295405(N)	215407:(ELV), (Zyl.:1-3)
215408											215408:(ELV), (Zyl.:4-6)
215413											215413:(ALV), (Zyl.:1-3)
215418											215418:(ALV), (Zyl.:4-6)
215407	24	235405			24	265404			2	295405(N)	225411: AKE; 215407: AKE, (ELV), (Zyl.:1-3); 235405: AKE; 265404: BAU; BDH

6 siehe Klappseite vorn • see fold in front.

		cm³			
A4 (8D2,8D5,B5)					
2.5 D	AKE; (132kW)	2496	10.00-05.03		
A4 (8E2,8E5,B6)					
1.6	ALZ; (75kW)	1595	11.00-12.04		
1.8 T	AMB; AVJ; BFB; BKB; (110kW-125kW)	1781	11.00-12.04		
1.8 T	BEX; (140kW)	1781	11.02-12.04		
2.0	ALT; (96kW)	1984	11.00-12.04		
2.0 FSI	AWA; (110kW)	1984	07.02-12.04		
2.4	AMM; BDV; (120kW-125kW)	2393	09.01-12.04		
3.0	ASN; AVK; BBJ; (160kW-162kW)	2976	11.00-12.04		
S4	BBK; (253kW)	4163	03.03-12.04		
1.9 TDI	AVB; (74kW)	1896	05.01-12.04		
1.9 TDI	BKE; (85kW)	1896	06.04-12.04		
1.9 TDI	AVF; AWX; (96kW)	1896	11.00-12.04		
2.5 TDI	AYM; (114kW)	2496	08.01-07.02	225411	
2.5 TDI	BCZ; BDG; BFC; (120kW)	2496	07.02-12.04	225411	
2.5 D; 2.5 TDi	AKE; BAU; BDH; (132kW)	2496	10.00-12.04	225411	
A4 (8EC,8ED)					
1.6	ALZ; (75kW)	1595	11.04-		
1.8 T; 2.0	ALT; BFB; (96kW-120kW)	1781-1984	11.04-		
2.0 FSi	AWA; (110kW)	1984	01.05-07.05		
2.0 FSi; 2.0 TFSI	BGB; BPG; BPJ; BUL; BWE; BWT; BYK; (125kW-162kW)	1984	11.04-		
3.0	BBJ; (160kW)	2976	11.04-07.06		
3.2 FSI	AUK; BKH; (188kW)	3123	01.05-		
S4	BBK; BHF; (253kW)	4163	11.04-		
RS4	BNS; (309kW)	4163	09.05-		
1.9 TDI	BKE; BRB; (85kW)	1896	11.04-		
2.0 TDI	BNA; BRF; (100kW)	1968	11.04-		
2.0 TDI	BLB; BRE; (103kW)	1968	11.04-		
2.0 TDI	BPW; (103kW)	1968	11.04-		
2.0 TDI	BRD; (125kW)	1968	06.06-		
2.5 TDI; 2.7 TDI; 3.0 TDI	ASB; BDG; BKN; BPP; BSG; (120kW-171kW)	2496-2967	11.04-		
A4 (8H7, 8HE)					
1.8 T; 2.0	ALT; BFB; (96kW-120kW)	1781-1984	07.02-		
2.0 TFSI 16V	BWE; BWT; (147kW)	1984	01.06-		
2.4	AMM; BDV; (120kW-125kW)	2393	04.02-12.05		

RUVILLE YOUR PARTNER

Audi

215408	24	235406			24	265702					215408: AKE, (ELV), (Zyl.:4-6); 235406: BAU; BDH;
											265702: AKE
215413											215413: AKE, (ALV), (Zyl.:1-3)
215418											215418: AKE, (ALV), (Zyl.:4-6)
	8	235409			8	265165			1	295401(N)	
	8	235402 [6]									
					12	265704					265704:(ELV)
					8	265705					265705:(ALV)
					12	265704			2	295405(N)	265704:(ELV)
					8	265705					265705:(ALV)
					12	265704					265704:(ELV)
					8	265705					265705:(ALV)
	16	235408			16	265707					
					18	265704			4	295405(N)	265704:(ELV)
					12	265705					265705:(ALV)
					18	265704					265704:(ELV)
					12	265705					265705:(ALV)
	8	245406 [6]									245406:(ELV)
	8	245407 [6]									245407:(ALV)
215404					8	265403					
215701					8	265403					
215404					8	265403					
215407	24	235405			24	265702					215407:(ELV), (Zyl.:1-3)
215408											215408:(ELV), (Zyl.:4-6)
215413											215413:(ALV), (Zyl.:1-3)
215418											215418:(ALV), (Zyl.:4-6)
215407	24	235405			24	265404					225411: BFC; 215407: BFC, (ELV), (Zyl.:1-3); 235405: BFC;
											265404: BDG; BCZ
215408	24	235406			24	265702					215408: BFC, (ELV), (Zyl.:4-6); 235406: BDG; BCZ;
											265702: BFC
215413											215413: BFC, (ALV), (Zyl.:1-3)
215418											215418: BFC, (ALV), (Zyl.:4-6)
215407	24	235405			24	265404			2	295405(N)	225411: AKE; 215407: AKE, (ELV), (Zyl.:1-3); 235405: AKE;
											265404: BAU; BDH
215408	24	235406			24	265702					215408: AKE, (ELV), (Zyl.:4-6); 235406: BAU; BDH;
											265702: AKE
215413											215413: AKE, (ALV), (Zyl.:1-3)
215418											215418: AKE, (ALV), (Zyl.:4-6)
	8	235409			8	265165					265165: →5#400000
	8	235402 [6]			8	265707					235402: →5#400000; 265707: 5#400001→
					12	265704					265704:(ELV)
					8	265705					265705:(ALV)
	16	235408			16	265165					
	16	235408			16	265707					
					18	265704					265704:(ELV)
					12	265705					265705:(ALV)
	24	235700			24	265707					
	8	245406 [6]									245406:(ELV)
	8	245407 [6]									245407:(ALV)
	32	235704			32	265703					
215701					8	265403					
215421											215421:(ELV)
215422											215422: BNA, (ALV), →6#133282
215432											215432: BNA, (ALV), 6#133282→
											215432: BRF, (ALV)
215421											215421:(ELV)
215422											215422: BLB, (ALV), →6#133282
215432											215432: BLB, (ALV), 6#133282→
											215432: BRE, (ALV)
215701					8	265403					215701:(A.T.), →6#157478
											215701:(M.T.), →6#155522
215421											215421:(ELV)
215423											215423:(ALV)
	24	235406			24	265404					
					12	265704					265704:(ELV)
					8	265705					265705:(ALV)
	16	235408			16	265707					
					18	265704			4	295405(N)	265704:(ELV)
					12	265705					265705:(ALV)

6 siehe Klappseite vorn • see fold in front.

		cm³			
A4 (8H7, 8HE)					
3.0	ASN; (162kW)	2976	04.02-12.05		
3.2 FSI	AUK; (188kW)	3123	01.06-		
S4	BBK; (253kW)	4163	03.04-		
RS4	BNS; (309kW)	4163	06.06-		
2.0 TDI	BPW; BRC; (100kW-103kW)	1968	01.06-		
2.5 TDI	BCZ; BDG; BFC; (120kW)	2496	08.02-12.05	225411	
2.7 TDI; 3.0 TDI	ASB; BKN; BPP; (132kW-171kW)	2698-2967	01.06-		
A4 (8K2, 8K5)					
1.8 FSI; 1.8 TFSI	CABA; CABB; CDHA; CDHB; (88kW-118kW)	1798	11.07-		
2.0 TFSi; 2.0 TFSI flexible fuel; 2.0 TFSI flexible fuel quattro	CAEA; CAEB; CDNB; CDNC; (132kW-155kW)	1984	06.08-		
S4	CAKA; (242kW-245kW)	2995	09.08-		
3.2 FSI	CALA; (192kW-195kW)	3197	11.07-		
2.0 TDi	CAGA; CAGB; CAGC; CAHA; CAHB; (88kW-125kW)	1968	11.07-		
2.7 TDI; 3.0 TDI	CAMA; CAMB; CAPA; CCWA; CCWB; CGKA; CGKB; (120kW-176kW)	2698-2967	11.07-		
A4 (8KH)					
2.0 TFSI	CDNC; (153kW-155kW)	1984	04.09-		
2.0 TDI	CAGA; CAHA; (105kW-125kW)	1968	04.09-		
3.0 TDI	CCWA; (174kW-176kW)	2967	04.09-		
A5 (8F,8T,8TA)					
1.8 TFSI	CABD; CDHB; (118kW-125kW)	1798	10.07-		
2.0 TFSI	CAEA; CDNB; CDNC; (132kW-155kW)	1984	06.08-		
S5	CAKA; (245kW)	2995	06.09-		
3.2 FSI	CALA; (195kW)	3197	06.07-		
S5	CAUA; (260kW)	4163	06.07-		
2.0 TDI	CAHA; CAHB; (120kW-125kW)	1968	08.08-		
2.7 TDI; 3.0 TDI	CAMA; CAMB; CAPA; CCWA; CCWB; CGKA; CGKB; (120kW-176kW)	2698-2967	06.07-		
A6 (4A,C4)					
1.8	ADR; (92kW)	1781	12.95-12.97		
2.0	AAE; (74kW)	1984	06.94-12.97		
2.0	ABK; (85kW)	1984	06.94-12.97		
2.0 16V	ACE; (103kW)	1984	06.94-12.97		
S6 TURBO	AAN; (169kW)	2226	06.94-12.97		
2.3	AAR; (98kW)	2309	06.94-12.95		
2.6	ACZ; (102kW)	2598	06.94-10.97		
2.6	ABC; (110kW)	2598	06.94-12.97		
2.8	AEJ; (120kW)	2771	08.95-07.96		
2.8	AAH; AEJ; AFC; (128kW)	2771	06.94-12.97		

RUVILLE YOUR PARTNER

Audi

					18	265704					265704:(ELV)
					12	265705					265705:(ALV)
	24	235700			24	265707					
	8	245406 [6]									245406:(ELV)
	8	245407 [6]									245407:(ALV)
	32	235704			32	265703					
					8	265403					
215407	24	235405			24	265404					225411: BFC; 215407: BFC, (ELV), (Zyl.:1-3); 235405: BFC; 265404: BDG; BCZ
215408	24	235406			24	265702					215408: BFC, (ELV), (Zyl.:4-6); 235406: BDG; BCZ; 265702: BFC
215413											215413: BFC, (ALV), (Zyl.:1-3)
215418											215418: BFC, (ALV), (Zyl.:4-6)
	24	235406			24	265404					
	16	235700			16	265707					
	8	235700			8	265707					235700:(ELV); 265707:(ELV)
	8	235703 [6]									235703:(ALV)
	24	235700			24	265707					
	12	235700			12	265707					235700:(ALV); 265707:(ALV)
	12	235703 [6]									235703:(ELV)
	16	235406			16	265404					
	24	235406			24	265404					
	8	235700			8	265707					235700:(ELV); 265707:(ELV)
	8	235703 [6]									235703:(ALV)
	16	235406			16	265404					
	24	235406			24	265404					
	16	235700			16	265707					
	8	235700			8	265707					235700:(ELV); 265707:(ELV)
	8	235703 [6]									235703:(ALV)
	24	235700			24	265707					
	12	235700			12	265707					235700:(ALV); 265707:(ALV)
	12	235703 [6]									235703:(ELV)
	32	235700			32	265707					
	16	235406			16	265404					
	24	235406			24	265404					
					12	265704			1	295405(N)	265704:(ELV)
					8	265705			1	295404(K)	265705:(ALV); 295404(K):(GS)
									1	295405(K)	295405(K):(ST)
									1	295406(K)	295406(K):(GS), (mG)
					8	265426			1	295405(N)	265426: →032209
					8	265427			1	295404(K)	265427: 032210→; 295404(K):(GS)
									1	295405(K)	295405(K):(ST)
									1	295406(K)	295406(K):(GS), (mG)
					8	265426			1	295405(N)	265426: →243926
					8	265427			1	295404(K)	265427: 243927→; 295404(K):(GS)
									1	295405(K)	295405(K):(ST)
									1	295406(K)	295406(K):(GS), (mG)
					8	265426			1	295405(N)	
									1	295404(K)	295404(K):(GS)
									1	295405(K)	295405(K):(ST)
									1	295406(K)	295406(K):(GS), (mG)
					20	265426			1	295405(N)	
									1	295404(K)	295404(K):(GS)
									1	295406(K)	295406(K):(GS), (mG)
					10	265426			1	295405(N)	
									1	295404(K)	295404(K):(GS)
									1	295406(K)	295406(K):(GS), (mG)
					12	265426					265426: →S#026714
					12	265427					265427: S#026715→
					12	265426			1	295405(N)	265426: →S#026714
					12	265427			1	295404(K)	265427: S#026715→; 295404(K):(GS)
									1	295406(K)	295406(K):(GS), (mG)
					12	265427			1	295405(N)	
					12	265426			1	295405(N)	265426: →S#026714
					12	265427			1	295404(K)	265427: S#026715→; 295404(K):(GS)
									1	295406(K)	295406(K):(GS), (mG)

6 siehe Klappseite vorn • see fold in front.

		cm³			
A6 (4A,C4)					
2.8	ACK; (142kW)	2771	12.95-12.97		
S6 4.2	AEC; (213kW)	4172	06.94-12.97		
S6 PLUS	AHK; (240kW)	4172	04.96-12.97		
1.9 TDI	1Z; AHU; (66kW)	1896	06.94-12.97	225403	
2.5 TDI	AAT; AEL; (84kW-103kW)	2461	06.94-12.97	225702	
A6 (4B,C5)					
1.8	AFY; (85kW)	1781	05.97-01.05		
1.8	AJP; ANQ; AQE; ARH; (92kW)	1781	07.97-01.05		
1.8 T	AEB; ANB; APU; ARK; AWL; AWT; (110kW)	1781	01.97-01.05		
1.8 T	AJL; (132kW)	1781	12.97-01.05		
2.0	ALT; (96kW)	1984	08.01-01.05		
2.4	ALW; ARN; ASM; (100kW)	2393	07.98-01.05		
2.4; 2.7 T; 2.8	AGA; AGE; AJG; AJK; ALF; AML; AMM; APC; APS; APZ; ARE; ARJ; ATX; AZA; BBG; BDV; BES; (115kW-184kW)	2393-2771	02.97-01.05		
2.8	ACK; ALG; AMX; APR; AQD; (142kW)	2771	02.97-01.05		
3.0	ASN; BBJ; (160kW-162kW)	2976	06.01-01.05		
3.7	AQG; (191kW)	3697	03.99-01.05		
4.2	ARS; ASG; AWN; (220kW)	4172	11.98-01.05		
RS6; RS6 plus; S6	ANK; AQJ; BCY; BRV; (250kW-353kW)	4172	09.99-01.05		
1.9 TDI	AFN; AVG; (81kW)	1896	04.97-04.01	225403	
1.9 TDI	AJM; (85kW)	1896	07.00-01.05		
1.9 TDI	AVF; AWX; (96kW)	1896	08.01-01.05		
2.5 TDI	AFB; AKN; (110kW)	2496	07.97-01.05	225411	
2.5 TDI	AYM; (114kW)	2496	08.01-01.05	225411	
2.5 TDI	BCZ; BDG; BFC; (120kW)	2496	07.02-01.05	225411	
2.5 TDI	AKE; BAU; BDH; BND; (132kW)	2496	02.00-01.05	225411	
A6 (4F2,4F5)					
2.0 TFSI	BPJ; BYK; (125kW)	1984	06.05-		
2.4	BDW; (130kW)	2393	05.04-10.08		
2.8 FSI	BDX; CCDA; CCEA; (140kW-162kW)	2773	11.06-		

RUVILLE YOUR PARTNER

Audi

					18	265704					265704:(ELV)
					12	265705					265705:(ALV)
					32	265705			2	295405(N)	265705: T#073947→
					16	265115					265115:(ELV); 265705:(ALV)
215409					8	265426			1	295405(N)	
									1	295404(K)	295404(K):(GS)
									1	295405(K)	295405(K):(ST)
									1	295406(K)	295406(K):(GS), (mG)
215702					10	265426			1	295404(K)	295404(K):(GS)
									1	295406(K)	295406(K):(GS), (mG)
					12	265704			1	295405(N)	265704:(ELV)
					8	265705			1	295404(K)	265705:(ALV); 295404(K):(GS)
									1	295405(K)	295405(K):(ST)
									1	295406(K)	295406(K):(GS), (mG)
					12	265704			1	295401(N)	265704:(ELV)
					8	265705					265705:(ALV)
					12	265704			2	295401(N)	265704:(ELV); 295401(N): ANB, APU, AWT
					8	265705			1	295405(N)	265705:(ALV); 295405(N): AEB, ARK
									1	295401(K)	295401(K):(ST), ANB, APU
									1	295404(K)	295404(K):(GS), AEB, ARK
									1	295405(K)	295405(K):(ST), AEB, ARK
									1	295406(K)	295406(K):(GS), AEB, ARK, (mG)
					12	265704			1	295405(N)	265704:(ELV)
					8	265705			1	295405(K)	265705:(ALV); 295405(K):(ST)
					12	265704					265704:(ELV)
					8	265705					265705:(ALV)
					12	265704			4	295405(N)	265704:(ELV)
					8	265705					265705:(ALV)
					18	265704			4	295405(N)	265704:(ELV)
					12	265705					265705:(ALV)
					18	265704			4	295405(N)	265704:(ELV); 295405(N): ALG, AMX, APR, AQD
					12	265705					265705:(ALV)
					18	265704					265704:(ELV)
					12	265705					265705:(ALV)
	8	245404 [6]									245404:(ELV)
	8	245405 [6]									245405:(ALV)
	8	245404 [6]									245404:(ELV), ARS, ASG
	8	245405 [6]									245405:(ALV), ARS, ASG
	8	245406 [6]									245406:(ELV)
	8	245407 [6]									245407:(ALV)
215409					8	265426			1	295405(N)	
									1	295404(K)	295404(K):(GS)
									1	295405(K)	295405(K):(ST)
									1	295406(K)	295406(K):(GS), (mG)
215404					8	265403			1	295401(N)	
215404					8	265403					
215407	24	235405			24	265702			2	295405(N)	215407:(ELV), (Zyl.:1-3)
215408											215408:(ELV), (Zyl.:4-6)
215413											215413:(ALV), (Zyl.:1-3)
215418											215418:(ALV), (Zyl.:4-6)
215407	24	235405			24	265702					215407:(ELV), (Zyl.:1-3)
215408											215408:(ELV), (Zyl.:4-6)
215413											215413:(ALV), (Zyl.:1-3)
215418											215418:(ALV), (Zyl.:4-6)
215407	24	235405			24	265404					225411: BFC; 215407: BFC, (ELV), (Zyl.:1-3); 235405: BFC; 265404: BDG; BCZ
215408	24	235406			24	265702					215408: BFC, (ELV), (Zyl.:4-6); 235406: BDG; BCZ; 265702: BFC
215413											215413: BFC, (ALV), (Zyl.:1-3)
215418											215418: BFC, (ALV), (Zyl.:4-6)
215407	24	235405			24	265404			2	295405(N)	225411: AKE; 215407: AKE, (ELV), (Zyl.:1-3); 235405: AKE; 265404: BAU; BDH
215408	24	235406			24	265702					215408: AKE, (ELV), (Zyl.:4-6); 235406: BAU; BDH; 265702: AKE
215413											215413: AKE, (ALV), (Zyl.:1-3)
215418											215418: AKE, (ALV), (Zyl.:4-6)
	16	235408			16	265707					
	24	235700			24	265707					
	12	235700			12	265707					235700:(ALV); 265707:(ALV)
	12	235703 [6]									235703:(ELV)

6 siehe Klappseite vorn • see fold in front.

		cm³			
Audi					
A6 (4F2,4F5)					
3.0	BBJ; (160kW)	2976	05.04-05.06		
3.0 TFSI; 3.2 FSI	AUK; BKH; BYU; CAJA; (183kW-213kW)	2995-3123	05.04-		
4.2	BAT; (246kW)	4163	05.04-		
4.2 FSI	BVJ; (257kW)	4163	06.06-		
RS6; S6	BUH; BXA; (315kW-426kW)	4991-5204	03.06-		
2.0 TDI	BVG; (89kW)	1968	09.05-06.06		
2.0 TDI	BNA; BRF; CAGB; (100kW)	1968	07.04-		
2.0 TDI	BLB; BRE; (103kW)	1968	07.04-10.08		
2.0 TDI	CAHA; CAHB; (120kW-125kW)	1968	10.08-		
2.7 TDI; 3.0 TDI; 3.0 TDi PF	ASB; BMK; BNG; BPP; BSG; CANA; CANB; CANC; CAND; CDYA; CDYB; CDYC; (120kW-176kW)	2698-2967	05.04-		
A6 (4FH)					
3.0 TFSI; 3.2 FSI	AUK; CAJA; (188kW-213kW)	2995-3123	05.06-		
4.2 FSI	BVJ; (257kW)	4163	05.06-		
2.7 TDI; 3.0 TDI	ASB; BNG; BPP; BSG; CANA; CDYA; (120kW-176kW)	2698-2967	05.06-		
A8 (4D2,4D8)					
2.8	AAH; AEJ; (120kW-128kW)	2771	03.94-03.96		
2.8	ACK; ALG; AMX; APR; AQD; (142kW)	2771	04.96-09.02		
3.7	AEW; AKJ; (169kW)	3697	07.95-12.98		
3.7; 4.2	AKC; AQG; ARU; (175kW-191kW)	3697-4172	11.98-09.02		
4.2	AEM; (180kW)	4172	03.94-07.96		
4.2	ABZ; AKG; (220kW)	4172	03.94-11.98		
4.2	AQF; AUW; AUX; (228kW)	4172	11.98-09.02		
S8	AHC; AKH; (250kW)	4172	07.96-06.99		
S8	AQH; AVP; (265kW)	4172	06.99-09.02		
6.0 W12	AZC; (309kW)	5998	01.01-09.02		
2.5 TDI	AFB; AKE; AKN; (110kW-132kW)	2496	01.97-09.02	225411	
3.3 TDI	AKF; (165kW)	3328	06.00-09.02		
A8 (4E_)					
2.8 FSI	BDX; (154kW)	2773	08.07-		
3.0; 3.0 Long	ASN; BBJ; (160kW-162kW)	2976	07.03-		
3.2 FSI	BPK; (191kW)	3123	06.05-		
3.7	BFL; (206kW)	3697	10.02-		
4.2 FSI	BVJ; (257kW)	4163	06.06-		
4.2	BFM; (246kW)	4172	10.02-		
S8	BSM; (331kW)	5204	06.06-		
6.0 W12	BHT; BSB; BTE; (331kW)	5998	12.03-		
3.0 TDI	ASB; BNG; (155kW-171kW)	2967	08.03-		
4.0 TDI; 4.2 TDI	ASE; BMC; BVN; (202kW-254kW)	3936-4134	03.03-		
ALLROAD (4BH)					
2.7 T	ARE; BES; (184kW)	2671	05.00-08.05		
4.2 V8	BAS; (220kW)	4163	07.02-08.05		
2.5 TDI	BCZ; (120kW)	2496	05.03-08.05		
2.5 TDI	AKE; BAU; (132kW)	2496	05.00-08.05	225411	

RUVILLE YOUR PARTNER

Audi

					18	265704					265704:(ELV)
					12	265705					265705:(ALV)
	24	235700			24	265707					
	8	245405 [6]									245405:(ALV), 5#030001→
	8	245406 [6]									245406:(ELV)
	8	245407 [6]									245407: →5#030000, (ALV)
	32	235700			32	265707					
	40	235700			40	265707					
215421											215421:(ELV)
215432											215432:(ALV)
215421	16	235406			16	265404					215421: BRF, BNA, (ELV); 235406: CAGB; 265404: CAGB
215422											215422: BNA, (ALV)
215432											215432: BRF, (ALV)
215421											215421:(ELV)
215422											215422: BLB, (ALV)
215432											215432: BRE, (ALV)
	16	235406			16	265404					
	24	235406			24	265404					
	24	235700			24	265707					
	32	235700			32	265707					
	24	235406			24	265404					
					12	265427			1	295405(N)	
									1	295404(K)	295404(K):(GS)
									1	295406(K)	295406(K):(GS), (mG)
					18	265704			4	295405(N)	265704:(ELV); 295405(N): ALG, AMX, APR, AQD
					12	265705					265705:(ALV)
					32	265705			2	295405(N)	
	8	245404 [6]									245404:(ELV)
	8	245405 [6]									245405:(ALV)
									2	295405(N)	
					32	265705			2	295405(N)	265705: AKG; ABZ, T#008227→
	8	245404 [6]									245404:(ELV)
	8	245405 [6]									245405:(ALV)
					16	265115			2	295405(N)	265115:(ELV); 265705:(ALV)
	8	245406 [6]									245406:(ELV)
	8	245407 [6]									245407:(ALV)
	48	235701			48	265703					
215407	24	235405			24	265702			2	295405(N)	215407:(ELV), (Zyl.:1-3)
215408											215408:(ELV), (Zyl.:4-6)
215413											215413:(ALV), (Zyl.:1-3)
215418											215418:(ALV), (Zyl.:4-6)
					32	265716					
	12	235700			12	265707					235700:(ALV); 265707:(ALV)
	12	235703 [6]									235703:(ELV)
					18	265704					265704:(ELV)
					12	265705					265705:(ALV)
	24	235700			24	265707					
	8	245404 [6]									245404:(ELV)
	8	245405 [6]									245405:(ALV)
	32	235700			32	265707					
	8	245404 [6]									245404:(ELV)
	8	245405 [6]									245405:(ALV)
	40	235700			40	265707					
	48	235701			48	265716					
	24	235406			24	265404					
	32	235406			32	265404					
					18	265704			4	295405(N)	265704:(ELV); 295405(N): ARE
					12	265705					265705:(ALV)
	8	245406 [6]									245406:(ELV)
	8	245407 [6]									245407:(ALV)
	24	235406			24	265404					
215407	24	235405			24	265404			2	295405(N)	225411: AKE;215407: AKE, (ELV), (Zyl.:1-3);235405: AKE; 265404: BAU
215408	24	235406			24	265702					215408: AKE, (ELV), (Zyl.:4-6);235406: BAU;265702: AKE
215413											215413: AKE, (ALV), (Zyl.:1-3)
215418											215418: AKE, (ALV), (Zyl.:4-6)

6 siehe Klappseite vorn • see fold in front.

		cm³			
Audi					
CABRIOLET (8G7,B4)					
1.8	ADR; (92kW)	1781	01.97-08.00		
2.0 E	ABK; (85kW)	1984	01.93-07.98		
2.0 16V	ACE; (103kW)	1984	06.95-07.96		
2.3 E	NG; (98kW)	2309	05.91-07.94		
2.6	ACZ; (102kW)	2598	05.95-08.00		
2.6; 2.8	AAH; ABC; (110kW-128kW)	2598-2771	11.92-08.00		
1.9 TDI	1Z; AHU; (66kW)	1896	06.95-08.00	225403	
COUPE (81,85)					
1.6	YN; (55kW)	1595	07.80-08.81		
1.8	DD; (55kW)	1781	08.81-07.83		
1.8 GT	SF; (65kW)	1781	04.86-10.88		
1.8 GT	DS; JV; (66kW)	1781	09.82-10.88		
1.8 GT	DS; JN; NE; (66kW)	1781	09.85-10.88		
1.8 GT	JN; (68kW)	1781	01.85-07.88		
1.8 GT	DZ; PV; (79kW-82kW)	1781	12.84-10.88		
1.9	WN; (85kW)	1921	08.80-07.83		
2.0	SK; (83kW)	1994	03.86-04.88		
2.0	HP; JS; (85kW)	1994	09.83-07.86		
2.1 GT	WE; (79kW)	2144	01.81-07.83		
2.1 GT	KE; KL; (96kW)	2144	09.82-08.84		
2.2	JT; (88kW)	2226	08.85-10.88		
2.2; 2.2 GT	HY; KV; (100kW)	2226	09.84-10.88		
2.2 GT; 2.3	KX; NG; (85kW-100kW)	2229-2309	07.81-10.88		

RUVILLE YOUR PARTNER

Audi

					12	265704			1	295405(N)	265704:(ELV)
					8	265705			1	295404(K)	265705:(ALV); 295404(K):(GS)
									1	295405(K)	295405(K):(ST)
									1	295406(K)	295406(K):(GS), (mG)
					8	265426			1	295405(N)	265426:→243926
					8	265427			1	295404(K)	265427:243927→; 295404(K):(GS)
									1	295405(K)	295405(K):(ST)
									1	295406(K)	295406(K):(GS), (mG)
					8	265426			1	295405(N)	
									1	295404(K)	295404(K):(GS)
									1	295405(K)	295405(K):(ST)
									1	295406(K)	295406(K):(GS), (mG)
					10	265426			1	295405(N)	
									1	295404(K)	295404(K):(GS)
									1	295406(K)	295406(K):(GS), (mG)
					12	265426					265426:→S#026714
					12	265427					265427:S#026715→
					12	265426			1	295405(N)	265426:→S#001302
									1	295404(K)	295404(K):(GS)
									1	295406(K)	295406(K):(GS), (mG)
215409					8	265426			1	295405(N)	
									1	295404(K)	295404(K):(GS)
									1	295405(K)	295405(K):(ST)
									1	295406(K)	295406(K):(GS), (mG)
215410					8	265430			1	295405(N)	
									1	295404(K)	295404(K):(GS)
									1	295405(K)	295405(K):(ST)
									1	295406(K)	295406(K):(GS), (mG)
					8	265430			1	295405(N)	
									1	295404(K)	295404(K):(GS)
									1	295405(K)	295405(K):(ST)
									1	295406(K)	295406(K):(GS), (mG)
					8	265426			1	295405(N)	
									1	295404(K)	295404(K):(GS)
									1	295405(K)	295405(K):(ST)
									1	295406(K)	295406(K):(GS), (mG)
					8	265426 [1]			1	295405(N)	265430: JV, →F#220000; 265426: DS
					8	265426			1	295404(K)	265426: JV, G#000001→; 295404(K):(GS)
									1	295405(K)	295405(K):(ST)
									1	295406(K)	295406(K):(GS), (mG)
					8	265426 [1]			1	295405(N)	265430: DS, →12.85; 265426: DS, 01.86→
					8	265426					265426: JN
					8	265426 [1]			1	295405(N)	265430: →F#220000; 265426: G#000001→
									1	295404(K)	295404(K):(GS)
									1	295405(K)	295405(K):(ST)
									1	295406(K)	295406(K):(GS), (mG)
					8	265426			1	295405(N)	
									1	295404(K)	295404(K):(GS)
									1	295405(K)	295405(K):(ST)
									1	295406(K)	295406(K):(GS), (mG)
					10	265430			1	295405(N)	
									1	295404(K)	295404(K):(GS)
									1	295406(K)	295406(K):(GS), (mG)
					10	265426			1	295405(N)	
									1	295404(K)	295404(K):(GS)
									1	295406(K)	295406(K):(GS), (mG)
					8	265426 [1]			1	295405(N)	265430: →F#220000; 265426: G#000001→
									1	295404(K)	295404(K):(GS)
									1	295406(K)	295406(K):(GS), (mG)
					8	265430			1	295405(N)	265430:{S}, {CZ}; 295405(N):{S}, {CZ}
									1	295404(K)	295404(K):(GS)
									1	295406(K)	295406(K):(GS), (mG)
					10	265430			1	295405(N)	
									1	295404(K)	295404(K):(GS)
									1	295406(K)	295406(K):(GS), (mG)
					10	265426			1	295405(N)	
									1	295404(K)	295404(K):(GS)
									1	295406(K)	295406(K):(GS), (mG)
					10	265426 [1]			1	295405(N)	265430: →F#220000; 265426: G#000001→
									1	295404(K)	295404(K):(GS)
									1	295406(K)	295406(K):(GS), (mG)
					10	265426			1	295405(N)	

1 siehe Klappseite vorn • see fold in front.

		cm³			
Audi					
COUPE (81,85)					
2.2 GT; 2.3	KX; NG; (85kW-100kW)	2229-2309	07.81-10.88		
COUPE (89,8B)					
1.8	DZ; (82kW)	1781	08.89-07.91		
2.0	3A; (82kW-83kW)	1984	05.89-07.90		
2.0	AAD; ABK; (85kW)	1984	05.89-12.96		
2.0 16V	6A; ACE; (101kW-103kW)	1984	01.92-12.96		
2.0 20 V; 2.0 20V	NM; (118kW)	1994	08.89-07.91		
2.2	KV; (100kW)	2226	11.88-07.91		
S2	3B; ABY; (162kW-169kW)	2226	09.90-12.96		
2.3	NG; (98kW-100kW)	2309	10.88-12.96		
2.3 20V	7A; (123kW-125kW)	2309	11.88-12.96		
2.6; 2.8	AAH; ABC; (110kW-128kW)	2598-2771	08.91-12.96		
Q5					
2.0 TFSI	CDNB; CDNC; (132kW-155kW)	1984	11.08-		
3.2 FSI	CALB; (199kW)	3197	11.08-		
2.0 TDI	CAGA; CAGB; CAHA; CAHB; (100kW-125kW)	1968	11.08-		
3.0 TDI	CCWA; CCWB; (155kW-176kW)	2967	11.08-		
Q7					
3.6 FSI	BHK; (206kW)	3597	08.06-		
4.2 FSI	BAR; (257kW)	4163	03.06-		
3.0 TDi	BUG; BUN; CASA; CASB; CCMA; (155kW-176kW)	2967	03.06-		
4.2 TDI	BTR; CCFA; (240kW-250kW)	4134	03.07-		
6.0 TDI	CCGA; (368kW)	5934	09.08-		
QUATTRO (85)					
2.1 TURBO	GV; WR; (147kW)	2144	07.80-07.87		
2.1 20V TURBO	KW; (225kW)	2144	05.84-07.87		
2.2 TURBO	1B; MB; (147kW)	2226	08.87-07.89		
2.2 20V	RR; (162kW)	2226	08.89-07.91		
R8					
4.2	BYH; (309kW)	4163	04.07-		
5.2; 5.2 FSI quattro	BUJ; (381kW-386kW)	5204	04.09-		
R8 SPYDER					
4.2 FSI quattro	BYH; (309kW)	4163	02.10-		
5.2 FSI quattro	BUJ; (386kW)	5204	02.10-		
TT (8J3, 8J9)					
1.8 TFSI	CDAA; (118kW)	1798	06.08-		
2.0 TFSI	(145kW)	1984	06.08-		
2.0 TFSI	BPY; BWA; CCTA; CCZA; (147kW)	1984	10.06-		
2.0 TFSI	CCZA; (147kW)	1984	06.08-		
2.0 TFSI	CDLB; (200kW)	1984	06.08-		
2.5 TFSI	CEPA; (250kW)	2480	05.09-		
3.2 V6	BUB; (184kW)	3189	10.06-		
2.0 TDI	CBBB; (125kW)	1968	06.08-		

RUVILLE YOUR PARTNER

Audi

									1	295404(K)	295404(K):(GS)
									1	295406(K)	295406(K):(GS), (mG)
					8	265426			1	295405(N)	
									1	295404(K)	295404(K):(GS)
									1	295405(K)	295405(K):(ST)
									1	295406(K)	295406(K):(GS), (mG)
					8	265426			1	295405(N)	
					8	265426			1	295405(N)	
									1	295404(K)	295404(K):(GS)
									1	295405(K)	295405(K):(ST)
									1	295406(K)	295406(K):(GS), (mG)
					16	265426			1	295405(N)	
									1	295404(K)	295404(K):(GS)
									1	295405(K)	295405(K):(ST)
									1	295406(K)	295406(K):(GS), (mG)
					20	265426					
					10	265426			1	295405(N)	
									1	295404(K)	295404(K):(GS)
									1	295406(K)	295406(K):(GS), (mG)
					20	265426			1	295405(N)	
									1	295404(K)	295404(K):(GS)
									1	295406(K)	295406(K):(GS), (mG)
					10	265426			1	295405(N)	
									1	295404(K)	295404(K):(GS)
									1	295406(K)	295406(K):(GS), (mG)
					20	265426			1	295405(N)	
									1	295404(K)	295404(K):(GS)
									1	295406(K)	295406(K):(GS), (mG)
					12	265426			1	295405(N)	265426: →S#000544
					12	265427			1	295404(K)	265427: S#000545→; 295404(K):(GS)
									1	295406(K)	295406(K):(GS), (mG)
	8	235700			8	265707					235700:(ELV); 265707:(ELV)
	8	235703 [6]									235703:(ALV)
	12	235700			12	265707					235700:(ALV); 265707:(ALV)
	12	235703 [6]									235703:(ELV)
	16	235406			16	265404					
	24	235406			24	265404					
	24	235701			24	265703					
	32	235700			32	265707					
	24	235406			24	265404					
	32	235406			32	265404					
	24	235406			24	265404					
					10	265430			1	295405(N)	
									1	295404(K)	295404(K):(GS)
									1	295406(K)	295406(K):(GS), (mG)
					10	265430					
					10	265426			1	295405(N)	265426: MB; 295405(N): MB
									1	295404(K)	295404(K):(GS)
									1	295406(K)	295406(K):(GS), (mG)
					10	265426					
	32	235704			32	265703					
	40	235704			40	265703					
	32	235704			32	265703					
	40	235704			40	265703					
	16	235700			16	265707					
	16	235408			16	265707					
	16	235408			16	265707					235408: BWA; BPY
	16	235700									235700: CCZA; CCTA
	16	235700			16	265707					
	16	235408			16	265707					
	20	235408			20	265707					
	24	235701			24	265703					
	16	235406			16	265404					

6 siehe Klappseite vorn • see fold in front.

		cm³			
Audi					
TT (8N3/8N9)					
1.8 T	AUM; (110kW)	1781	01.01-06.06		
1.8 T	BVP; (120kW)	1781	09.05-06.06		
1.8 T	AJQ; APP; ARY; ATC; AUQ; AWP; (132kW)	1781	10.98-06.06		
1.8 T	BVR; (140kW)	1781	09.05-06.06		
1.8 T	AMU; APX; BAM; (165kW)	1781	10.98-06.06		
1.8 T	BFV; (176kW)	1781	03.05-06.06		
3.2 VR6	BHE; BPF; (184kW)	3189	07.03-06.06		
V8 (D1)					
3.6	PT; (180kW-184kW)	3562	10.88-02.94		
4.2	ABH; (206kW)	4172	10.91-02.94		
Autobianchi					
Y10					
1.3 i.e. GT	146A5.046; 156B.000; (54kW-57kW)	1297-1301	06.89-		
BMW					
1 (E81, E82, E87, E88)					
116i	N45B16; N45B16A; N45B16TU2; (85kW)	1596	09.04-		
116i	N45B16TU2; (90kW)	1597-1995	09.07-		
118i	N42B20B; N46B20; (95kW)	1995	09.04-		
118i	N43B20A; (105kW)	1995	04.07-		
120i	N42B20A; N46B20; (110kW)	1995	09.04-		
120i	N43B20A; (125kW)	1995	04.07-		
135i	N54B30A; (225kW)	2979	10.07-		
125i; 130i; 3.0	N52B30; N52B30A; N53B30A; (160kW-195kW)	2996	03.05-		
116d	N47D20A; (85kW)	1995	03.09-		
118d	M47N204D4; (90kW)	1995	09.04-		
118d	(100kW-105kW)	1995	09.08-		
118d	(105kW)	1995	09.09-		
118d; 120d	N47D20A; (105kW-120kW)	1995	04.07-		
120d	M47N204D4; N47D20A; (120kW)	1995	09.04-		
120d; 123d	N47D20A; N47D20B; (130kW-150kW)	1995	03.07-		
3 (E21)					
315; 316; 318; 318i	M10B16; M10B18; (55kW-77kW)	1573-1766	08.75-03.84		
320/6	M20B20; (90kW)	1990	09.77-08.82	225007	
323i	M20B23; (105kW)	2316	01.78-08.82		
3 (E30)					
315	M10B16; (55kW)	1573	09.82-10.83		
316i	M40B16; (73kW-75kW)	1596	09.87-06.94	225009	
316; 316 (Ecotronic); 316i 1.8; 318i	M10B18; (66kW-77kW)	1766	09.82-12.90		
318i	M40B18; (83kW-85kW)	1796	09.87-06.94	225009	
318is	M42B18; (100kW)	1796	09.89-08.91		
320i	M20B20; (92kW)	1990	09.82-12.85	225007	
320i	M20B20; (95kW)	1990	04.86-10.93	225007 225020	
320is	S14204EA; (141kW)	1990	05.88-12.90		
320i	M20B20; (95kW)	1991	12.85-06.91	225007 225020	
320i	M20B20; (95kW)	1991	01.88-12.91	225020	
M3 2.3; M3 2.3 EVO I	S14B23; (143kW-162kW)	2302-2303	07.86-06.91		
323i	M20B23; (102kW-110kW)	2316	09.82-08.86	225007	
M3 2.5 EVO II	S14B25; (175kW)	2467	01.90-01.92		
325i; 325iX	M20B25; (125kW-126kW)	2494	09.83-10.93	225011 225017	

RUVILLE YOUR PARTNER

Audi → BMW

					12	265704			2	295401(N)	265704:(ELV)
					8	265705					265705:(ALV)
					12	265704					265704:(ELV)
					8	265705					265705:(ALV)
					12	265704			2	295401(N)	265704:(ELV)
					8	265705					265705:(ALV)
					12	265704					265704:(ELV)
					8	265705					265705:(ALV)
					12	265704			2	295401(N)	265704:(ELV), AJQ, APX, APP, AUQ; 295401(N): AJQ, AUQ, APP, APX, ARY, BAM
					8	265705					265705:(ALV), AJQ, APX, APP, AUQ
					12	265704					265704:(ELV)
					8	265705					265705:(ALV)
	24	235701			24	265703					
					32	265705					
					32	265705			1	295405(N)	

					8	265802					

					16	265020					
	16	235011			16	265003					
					16	265020					
	16	235011			16	265003					
					16	265020					
	16	235011			16	265003					
	24	235012			24	265003					
		235006 [7]			24	265003					235006:(ELV)
		235007 [7]									235007:(ELV)
		235008 [7]									235008:(ELV)
		235009 [7]									235009:(ELV)
		235010 [7]									235010:(ELV)
	12	235012									235012:(ALV)
	16	235004			16	265002					235004:→08.09
	16	235013									235013:08.09→
	16	235003			16	265002					
	16	235000 [6]									
	16	235004			16	265002					235004:→08.09
	16	235013									235013:08.09→
	16	235013			16	265002					
	16	235004			16	265002					235004:→08.09
	16	235013									235013:08.09→
	16	235003			16	265002					
	16	235000 [6]									
	16	235004			16	265002					235004:→08.09
	16	235013									235013:08.09→
215006	8	245002									
215011	12	245006	2	255005					1	295005(N)	
	12	245006	2	255005					1	295005(N)	
215006	8	245002									
215015 [4]	8	235001			8	265005			1	295005(N)	
215006	8	245002									
215015 [4]	8	235001			8	265005			1	295005(N)	
					16	265006					
215011	12	245006	2	255005					1	295005(N)	
215011	12	245006	2	255005					1	295005(N)	225007:→09.87; 215011:→09.87
215024											225020:09.87→; 215024:09.87→
					16	265077					
215011	12	245006	2	255005					1	295005(N)	225007:→09.87; 215011:→09.87
215024											225020:09.87→; 215024:09.87→
215024	12	245006	2	255005					1	295005(N)	
					16	265077					
215011	12	245006	2	255005					1	295005(N)	
					16	265077					
215018	12	245006	2	255005							225011:(+KAT); 215018:(+KAT)
215023											

		cm³			
BMW					
3 (E30)					
325e 2.7	M20B27; (90kW)	2693	10.83-12.88	225029	
325e 2.7	M20B27; (95kW)	2693	01.85-08.87	225029	
324d; 324td	M21D24; M21D24W; M21D24WA; (63kW-85kW)	2443	09.85-06.93		
3 (E36)					
316i	M40B16; (73kW)	1596	09.90-09.93	225009	
316i	M40B16; M43B16; (75kW)	1596	09.90-09.93	225009	
316i	M43B16; (75kW)	1596	07.93-08.00		
316g	(75kW)	1596	12.95-08.00		
318i	M40B18; (83kW)	1796	12.90-10.93	225009	
318i	M43B18; (85kW)	1796	10.93-10.99		
318is; 318ti	M42B18; (103kW)	1796	03.92-09.97		
316i	M43164E3; M43B19TU; (77kW)	1895	12.98-08.00		
318is; 318ti	M44B19; (103kW)	1895	07.95-08.00		
320i	M50B; M50B20; M50B20TU; M52B; M52B20; (110kW)	1991	09.90-04.99		
320i	M50B; M50B20; M50B20TU; M52B; M52B20; (110kW)	1991	12.93-04.99		
320i; 323i; 323i 2.5; 323ti	M50B20; M50B20TU; M52B; M52B20; M52B25; (110kW-125kW)	1991-2494	01.95-08.00		
325i	M50B25; M50B25TU; (141kW)	2494	09.90-09.95		
325i Coupe	M50B25; M50B25TU; (141kW)	2494	03.92-04.99		
325i Cabriolet	M50B25; M50B25TU; (141kW)	2494	03.93-03.95		
328i	M52B28; M52B28TU; (142kW)	2793	01.95-10.99		
M3 3.0	S50B30; (210kW-217kW)	2990	10.92-10.95		
M3; M3 3.2	S50B32; (236kW)	3201	09.95-04.99		
318tds	M41D18; (66kW)	1665	01.95-08.00		
325td	M51D25; (85kW)	2497	09.91-02.98	225028	
325tds	M51D25; (105kW)	2503	05.93-10.99	225028	
3 (E46)					
316Ci; 316i	M43B16; (77kW)	1596	04.00-		
316Ci; 316i; 316ti	N42B18; N45B16; N45B16A; N46B18; N46B18A; (85kW)	1596-1796	06.01-		
316i; 318Ci; 318i	M43164E3; M43B19; M43B19TU; (77kW-87kW)	1895	02.98-02.05		
320Ci; 320i	M52B; M52B20; (110kW)	1991	03.98-09.00		
318 Ci; 318Ci; 318i; 318ti	N42B20; N46B20; N46B20A; N46B20B; (105kW-110kW)	1995	09.01-		
320Ci; 320i; 323Ci; 323i; 325Ci; 325i; 325ti; 325xi; 328Ci; 328i; 330 ci; 330Ci; 330i; 330xi	M52B25; M52B25TU; M52B28; M54226S1; M54256S5; M54306S3; M54B22; M54B25; M54B30; (125kW-170kW)	2171-2979	02.98-		
318d; 318td; 320Cd; 320d; 320td	M47204D1; M47D20; M47N204D4; (85kW-110kW)	1951-1995	04.98-		
330 Cd; 330Cd; 330d; 330xd	M57D30; M57N306D2; (135kW-150kW)	2926-2993	10.99-		
3 (E90, E91, E92, E93)					
316i	N45B16; N45B16A; N45B16TU2; (85kW)	1596	02.06-		
316i	N43B16A; (90kW)	1599	09.07-		
318i	N46B20; N46B20B; (95kW)	1995	09.05-		
318i	N43B20A; N46B20TU2; (105kW)	1995	09.07-		
2.0; 320i	N46B20; N46B20A; N46B20C; N46NB20B; (110kW)	1995	01.05-		
320i	N43B20A; N46B20B; (125kW)	1995	03.07-		
2.5; 325i; 325xi	N52B25; N52B25A; N52B25C; N52NB25A; (130kW-160kW)	2497	01.05-		
3.0; 325i; 325i xDrive; 325xi; 335i; 335i xDrive; 335xi	N53B30; N53B30A; N54B30A; N54B30B; (160kW-225kW)	2979-2996	09.06-		
3.0; 328i; 330i	N52B30; N52B30A; N52NB30A; (187kW-190kW)	2996	01.05-		
330xi	N52B30A; (190kW)	2996	01.05-		
330i	N52B30A; (190kW)	2996	09.06-		
330xi	N52B30A; (190kW)	2996	09.06-		

RUVILLE YOUR PARTNER

BMW

215029	12	245006									
215029											
215013									1	295005(N)	
215015 [4]	8	235001			8	265005			1	295005(N)	
215015 [4]	8	235001			8	265005			1	295005(N)	
215031	8	235001			8	265005					
215031	8	235001			8	265005					
215015 [4]	8	235001			8	265005			1	295005(N)	
215031					8	265005					
					16	265007					
215031	8	235001			8	265005					
					16	265007					
215001					24	265006					215001:(ELV), M50BVANOS, 09.92→; 265006: M50B, →09.92
215002					24	265007					215002:(ALV), M50BVANOS, 09.92→; 265007: M50B, 09.92→
					24	265010					265010: M52B
215001					24	265007					215001:(ELV), M50BVANOS; 265007: M50B
215002					24	265010					215002:(ALV), M50BVANOS; 265010: M52B
					24	265010					
215003					24	265006					215003:(ELV), 09.92→; 265006:→09.92
215004					24	265007					215004:(ALV), 09.92→; 265007:09.92→
215003					24	265006					215003:(ELV), 09.92→; 265006:→09.92
215004					24	265007					215004:(ALV), 09.92→; 265007:09.92→
215003					24	265007					215003:(ELV)
215004											215004:(ALV)
					24	265010					
					24	265077					
					24	265088					
					8	265007					
215025					12	265006					265006:→09.92
					12	265007					265007:10.92→
215025					12	265007					
215031					8	265005					
					16	265020					
215031					8	265005					
					24	265010					
					16	265020					
					24	265010					
	16	235003			16	265002					
	16	235000 [6]									
	24	235003			24	265002					
	24	235000 [6]									
					16	265020					
	16	235011			16	265003					
					16	265020					
	16	235011			16	265003					
					16	265020					
	16	235011			16	265003					
		235006 [7]			24	265003					235006:(ELV)
		235007 [7]									235007:(ELV)
		235008 [7]									235008:(ELV)
		235009 [7]									235009:(ELV)
		235010 [7]									235010:(ELV)
	12	235012									235012:(ALV)
	24	235012			24	265003					
		235006 [7]			24	265003					235006:(ELV)
		235007 [7]									235007:(ELV)
		235008 [7]									235008:(ELV)
		235009 [7]									235009:(ELV)
		235010 [7]									235010:(ELV)
	12	235012									235012:(ALV)
		235006 [7]			24	265003					235006:(ELV)
		235007 [7]									235007:(ELV)
		235008 [7]									235008:(ELV)
		235009 [7]									235009:(ELV)
		235010 [7]									235010:(ELV)
	12	235012									235012:(ALV)
					24	265003					
					24	265003					

		cm³			
BMW					
3 (E90, E91, E92, E93)					
330i; 330i xDrive	N52B30A; N53B30; N53B30A; (200kW)	2996	09.06-		
330i; 330xi	N52B30A; N53B30; N53B30A; (200kW)	2996	09.06-		
330i	N52B30A; N53B30; N53B30A; (200kW)	2996	03.07-		
330xi	N53B30A; (200kW)	2996	09.07-		
M3	S65B40; (309kW)	3999	03.07-		
316d	(85kW)	1995	07.09-		
318d	M47N204D4; (90kW)	1995	09.05-		
318d	N47D20A; (105kW)	1995	09.05-		
320d	M47D20TU; M47N204D4; (110kW-120kW)	1995	01.05-		
320d	M47N204D5; N47D20A; (120kW)	1995	09.05-		
320d; 320d xDrive; 320xd	N47D20A; (130kW)	1995	03.07-		
320d; 320d xDrive	(135kW)	1995	01.10-		
325d	M57306D3; M57D30TU2; N57306D3; N57N306D3; (145kW)	2993	09.06-		
325d	(150kW)	2993	01.10-		
330d; 330xd	M57306D3; M57D30TU2; (170kW)	2993	09.05-		
330d	M57D30TU2; N57N306D3; (170kW)	2993	03.07-		
330d; 330d xDrive; 330xd	(180kW)	2993	01.09-		
335d	M57N306D5; (210kW)	2993	09.06-		
5 (E12)					
520/6	M20B20; (90kW)	1990	09.77-05.81	225007	
520i	M10B20; (92kW)	1990	10.75-05.77		
528i	M30B28; (130kW)	2788	04.77-05.81		
528i	M30B28; (135kW)	2788	04.77-05.81		
M 535i	M30B35; (160kW)	3453	06.80-08.81		
5 (E28)					
518; 518i	M10B18; (66kW-77kW)	1766	06.81-12.87		
520i	M20B20; (92kW-95kW)	1990	06.81-12.87	225007 225020	
525i	M30B25; (110kW)	2495	06.81-12.87		
525e 2.7	M20B27; (90kW-95kW)	2693	09.81-12.87	225029	
528i	M30B28; (135kW)	2788	06.81-12.87	225018	
535i,M 535i	M30B35; (136kW)	3430	01.85-12.87	225014 225026	
535i,M 535i	M30B35; (141kW)	3430	01.85-12.87	225014	
535i,M 535i	M30B35; (160kW)	3430	01.85-12.87	225014	
M5 3.5	S38B35; (211kW)	3453	08.85-12.87		
524d; 524td	M21D24; M21D24W; M21D24WA; (63kW-85kW)	2443	09.83-12.87		
5 (E34)					
518i	M40B18; (83kW)	1796	08.89-09.95	225009	
518g; 518i	M43B18; (85kW)	1796	08.89-01.97		
520i	M20B20; (95kW)	1990	01.88-08.91	225020	
520i; 520i 24V	M50B; M50B20; M50B20TU; (110kW)	1991	09.89-01.97		
525i	M20B25; (125kW)	2494	01.88-08.91	225011	
525i 24V	M50B25; M50B25TU; M52B25; (141kW)	2494	09.89-09.95		
525iX 24V	M52B25; (141kW)	2494	10.91-09.95		

RUVILLE YOUR PARTNER

BMW

	24	235012			24	265003					
	24	235012			24	265003					235012: N53; 265003: N53
		235006 [7]			24	265003					235006: N52, (ELV)
		235007 [7]									235007: N52, (ELV)
		235008 [7]									235008: N52, (ELV)
		235009 [7]									235009: N52, (ELV)
		235010 [7]									235010: N52, (ELV)
	12	235012									235012: N52, (ALV)
	24	235012									235012: N53
	24	235012			24	265003					
					32	265012					
	16	235013			16	265002					
	16	235003			16	265002					
	16	235000 [6]									
	16	235004			16	265002					235004:→08.09
	16	235013									235013:08.09→
	16	235003			16	265002					
	16	235000 [6]									
	16	235003			16	265002					265002: M47
	16	235000 [6]									235000: M47
	16	235004			16	265002					235004:→08.09
	16	235013									235013:08.09→
	16	235013			16	265002					
	24	235003			24	265002					
	24	235000 [6]									
	24	235013			24	265002					
	24	235003			24	265002					
	24	235000 [6]									
	24	235003			24	265002					235003: M57; 265002: M57
	24	235000 [6]									235000: M57
	24	235004			24	265002					235004:→09.09
	24	235013									235013:09.09→
	24	235003			24	265002					
	24	235000 [6]									
215011	12	245006	2	255005					1	295005(N)	
	8	245002									
215019	12	245002									215019:08.78→
215019											215019:08.78→
215019	12	245002									
215006	8	245002									
215011	12	245006	2	255005							225007:→09.87; 215011:→09.87
215024											225020:09.87→; 215024:09.87→
	12	245002		[2]							255010:(ELV), (V); 255011:(ALV), (V); 255012:(ELV), (H); 255013:(ALV), (H)
215029	12	245006	2	255005							
215019	12	245002		[2]							255010:(ELV), (V); 255011:(ALV), (V); 255012:(ELV), (H); 255013:(ALV), (H)
215014	12	245002		[2]							255010:(ELV), (V); 255011:(ALV), (V); 255012:(ELV), (H); 255013:(ALV), (H)
215026											225026:(+KAT); 215026:(+KAT)
215014	12	245002		[2]							255010:(ELV), (V); 255011:(ALV), (V); 255012:(ELV), (H); 255013:(ALV), (H)
215014				[2]							255010:(ELV), (V); 255011:(ALV), (V); 255012:(ELV), (H); 255013:(ALV), (H)
					24	265077					
215013									1	295005(N)	
215015 [4]	8	235001			8	265005			1	295005(N)	
215031					8	265005					
215024	12	245006	2	255005					1	295005(N)	
215001					24	265006					215001:(ELV), M50BVANOS, 09.92→; 265006:→09.92
215002					24	265007					215002:(ALV), M50BVANOS, 09.92→; 265007: M50B25C, 09.92→, →09.94
					24	265010					265010:09.94→
215018	12	245006	2	255005					1	295005(N)	
215003					24	265006					215003: M50B25, (ELV), 09.92→, →09.94; 265006: M50B25, →09.92
215004					24	265007					215004: M50B25, (ALV), 09.92→, →09.94; 265007: M50B25C, 09.92→, →09.94
					24	265010					265010: M50B25, 09.94→
215003					24	265006					215003:(ELV), M50B25, 09.92→; 265006:→09.92

		cm³			
5 (E34)					
525iX 24V	M52B25; (141kW)	2494	10.91-09.95		
525i	M50B25; M50B25TU; (141kW)	2494	11.91-01.97		
525iX 24V	M50B25; M52B25; (141kW)	2494	02.92-01.97		
530i	M30B30; (138kW)	2986	01.88-08.91	225014	
530i V8	M60B30; (160kW)	2997	09.92-01.97		
535i	M30B35; (155kW)	3430	01.88-09.95	225014	
M5 3.6; M5 3.8	S38B36; S38B38; (232kW-250kW)	3535-3795	10.88-01.97		
540i; 540i V8	M60B40; (210kW)	3982	09.92-01.97		
524td	M21D24; M21D24WA; (85kW)	2443	03.88-09.95		
525td	M51D25; (85kW)	2497	03.93-01.97	225028	
525tds	M51D25; (105kW)	2503	09.91-01.97	225028	
5 (E39)					
520i; 523i; 525i; 528i; 530i	M52B; M52B20; M52B25; M52B25TU; M52B28; M52B28TU; M54256S5; M54306S3; M54B22; M54B25; M54B30; (100kW-170kW)	1991-2979	11.95-05.04		
535i; 540i	M62448S2; M62B; M62B35; M62B35TU; M62B44; M62B44TU; (173kW-210kW)	3498-4398	04.96-05.04		
M5	S38B49; S62B50; (230kW-294kW)	4941-4988	09.98-06.03		
520d	M47204D1; M47D20; (100kW)	1951	02.00-09.03		
525td	M51D25; (85kW)	2497	01.97-06.03		
525d	M57256D1; M57D25; (120kW)	2497	02.00-05.04		
525tds	M51D25; (105kW)	2503	01.96-05.04		
530d	M57D30; (135kW-142kW)	2926	08.98-05.04		
5 (E60/E61)					
520i	N43B20A; (125kW)	1995	09.07-		
520i; 525i	M54226S1; M54256S5; M54B22; M54B25; (125kW-141kW)	2171-2494	07.03-		
523i	N52B25; N52B25A; (130kW)	2497	07.05-		
523i	N52B25A; (140kW)	2497	01.07-		
525i; 525xi	N52B25; N52B25A; (160kW)	2497	07.05-		
530i	M54306S3; M54B30; (170kW)	2979	07.03-		
525i	N53B30; N53B30A; (160kW)	2996	01.07-		
525i xDrive; 525xi	N53B30A; (160kW)	2996	01.07-		
525i xDrive	N53B30A; (160kW)	2996	09.08-		
530i; 530xi	N52B30; N52B30A; (190kW)	2996	07.05-		
530i; 530xi	N52B30A; N53B30; N53B30A; (200kW)	2996	01.07-		
530xi	N53B30A; (200kW)	2996	01.07-		
530i xDrive	(200kW)	2996	09.08-		
540i; 545i; 550i	N62B40A; N62B44; N62B48A; N62B48B; (225kW-270kW)	4000-4799	09.03-		

RUVILLE YOUR PARTNER

BMW

215004					24	265007					215004:(ALV), M50B25, 09.92→; 265007: M50B25C, 09.92→, →09.94
					24	265010					265010:09.94→
215003					24	265006					215003:(ELV), M50B25, 09.92→; 265006:→09.92
215004					24	265007					215004:(ALV), M50B25, 09.92→; 265007:09.92→
215003					24	265006					215003:(ELV), M50B25, 09.92→; 265006:→09.92
215004					24	265007					215004:(ALV), M50B25, 09.92→; 265007:09.92→
215014	12	245002		[2]							255010:(ELV), (V); 255011:(ALV), (V); 255012:(ELV), (H); 255013:(ALV), (H)
					16	265006					
215014	12	245002		[2]							255010:(ELV), (V); 255011:(ALV), (V); 255012:(ELV), (H); 255013:(ALV), (H)
					24	265077					
					16	265006					
215013									1	295005(N)	
215025					12	265007					
215025					12	265006					265006:→09.92
					12	265007					265007:09.92→
					24	265010					
					32	265001					
					32	265010					
	16	235003			16	265002					
	16	235000 [6]									
215025					12	265007					
	24	235003			24	265002					
	24	235000 [6]									
215025					12	265007					
	24	235003			24	265002					
	24	235000 [6]									
	16	235011			16	265003					
					24	265010					
		235006 [7]			24	265003					235006:(ELV)
		235007 [7]									235007:(ELV)
		235008 [7]									235008:(ELV)
		235009 [7]									235009:(ELV)
		235010 [7]									235010:(ELV)
	12	235012									235012:(ALV)
	24	235012			24	265003					
		235006 [7]			24	265003					235006:(ELV)
		235007 [7]									235007:(ELV)
		235008 [7]									235008:(ELV)
		235009 [7]									235009:(ELV)
		235010 [7]									235010:(ELV)
	12	235012									235012:(ALV)
					24	265010					
	24	235012			24	265003					
	24	235012			24	265003					
		235006 [7]			24	265003					235006:(ELV)
		235007 [7]									235007:(ELV)
		235008 [7]									235008:(ELV)
		235009 [7]									235009:(ELV)
		235010 [7]									235010:(ELV)
	12	235012									235012:(ALV)
		235006 [7]			24	265003					235006:(ELV)
		235007 [7]									235007:(ELV)
		235008 [7]									235008:(ELV)
		235009 [7]									235009:(ELV)
		235010 [7]									235010:(ELV)
	12	235012									235012:(ALV)
		235006 [7]			24	265003					235006: N52, (ELV)
		235007 [7]									235007: N52, (ELV)
		235008 [7]									235008: N52, (ELV)
		235009 [7]									235009: N52, (ELV)
		235010 [7]									235010: N52, (ELV)
	12	235012									235012: N52, (ALV)
	24	235012									235012: N53
	24	235012			24	265003					
	24	235012			24	265003					
					32	265004					

		cm³			
BMW					
5 (E60/E61)					
M5	S85B50A; (373kW)	4999	09.04-		
520d	M47N204D4; M47N204D5; N47D20A; (110kW-120kW)	1995	07.05-		
520d	M47N204D4; N47D20A; (130kW)	1995	09.07-		
520d	N47D20A; (130kW)	1995	09.07-		
525d; 525d xDrive; 525xd; 530d; 530d xDrive; 530xd; 535d	M57256D1; M57306D3; M57306D4; M57D25TU; M57N256D4; M57N306D5; N57306D2; N57306D3; (120kW-210kW)	2497-2993	07.03-		
5 (F10)					
523i; 528i	(150kW-190kW)	2996	03.10-		
550i	(300kW)	4395	03.10-		
520d	(135kW)	1995	03.10-		
525d; 530d	(150kW-180kW)	2993	03.10-		
5 GRAN TURISMO					
535i	(225kW)	2979	10.09-		
550i	(300kW)	4395	10.09-		
530d	(180kW)	2993	10.09-		
6 (E24)					
628CSi	M30B28; (135kW)	2788	09.79-08.87	225018	
630CS	M30B30; (135kW)	2986	04.76-08.79		
633CSi	M30B32; (147kW)	3205	04.76-09.78	225018	
633CSi	M30B32; (145kW)	3210	09.78-08.84	225018	
635CSi	M30B35; (136kW)	3430	01.85-05.89	225014 225026	
635CSi	M30B35; (141kW)	3430	04.85-09.90		
635CSi	M30B35; (155kW)	3430	08.87-05.89	225014 225026	
635CSi	M30B35; (160kW)	3453	06.78-08.88	225014	
M 635CSi	S38B35; (191kW-211kW)	3453	03.84-05.89		
6 (E63/E64)					
630i	N52B30; N52B30A; (190kW)	2996	09.04-		
630i	N52B30A; N53B30; (200kW)	2996	07.07-		
645Ci; 650i	N62B44; N62B44A; N62B48B; (245kW-270kW)	4398-4799	01.04-		
M6	S85B50A; (373kW)	4999	09.05-		
635d	M57N306D5; N57N306D5; (210kW)	2993	07.07-		
7 (E23)					
732i/733i	M30B32; (145kW)	3210	05.77-09.79		
745i	M30B32; (185kW)	3210	04.80-04.83	225018	
735i	M30B35; (136kW)	3430	01.85-08.86	225026	
735i	M30B35; (141kW)	3430	04.85-08.86		
745i	M30B35; (185kW)	3430	05.83-08.86	225018	
735i	M30B35; (160kW)	3453	09.79-08.86	225018	
7 (E32)					
730i,iL	M30B30; (138kW-145kW)	2986	12.86-09.94	225014	
730i,iL V8	M60B30; (160kW)	2997	04.92-09.94		
735i,iL	M30B35; (155kW)	3430	09.86-09.92	225014 225026	
735i,iL	M30B35; (162kW)	3430	09.86-12.87	225014	

RUVILLE YOUR PARTNER

BMW

					40	265012					
	16	235003			16	265002					
	16	235000 [6]									
	16	235003			16	265002					235003: M47; 265002: N47
	16	235004									235004: N47, →08.09
	16	235013									235013: N47, 08.09→
	16	235004			16	265002					235004: N47, →08.09
	16	235013									235013: N47, 08.09→
	24	235003			24	265002					
	24	235000 [6]									
	24	235012			24	265003					
	32	235005			32	265011					
	16	235013			16	265002					
	24	235013			24	265002					
	12	235012									235012:(ALV)
	32	235005			32	265011					
	24	235013			24	265002					
215019	12	245002		[2]							255010:(ELV), (V); 255011:(ALV), (V); 255012:(ELV), (H); 255013:(ALV), (H)
	12	245002									
215019											
215019											225018:→09.79; 215019:→09.79
215014	12	245002		[2]							255010:(ELV), (V); 255011:(ALV), (V); 255012:(ELV), (H); 255013:(ALV), (H)
215026											225026:(+KAT); 215026:(+KAT)
215014											215014:→06.87
215014	12	245002		[2]							255010:(ELV), (V); 255011:(ALV), (V); 255012:(ELV), (H); 255013:(ALV), (H)
215026											225026:(+KAT); 215026:(+KAT)
215014	12	245002		[2]							215014:01.84→, →06.87; 255010:(ELV), (V); 255011:(ALV), (V); 255012:(ELV), (H); 255013:(ALV), (H)
215019											215019:→09.80
					24	265077					
		235006 [7]			24	265003					235006:(ELV)
		235007 [7]									235007:(ELV)
		235008 [7]									235008:(ELV)
		235009 [7]									235009:(ELV)
		235010 [7]									235010:(ELV)
	12	235012									235012:(ALV)
	24	235012			24	265003					235012: N53
					32	265004					
					40	265012					
	24	235003			24	265002					235003: M57; 265002: M57
	24	235000 [6]									235000: M57
215019											215019:08.78→
215019	12	245002		[2]							255010:(ELV), (V); 255011:(ALV), (V); 255012:(ELV), (H); 255013:(ALV), (H)
215014	12	245002		[2]							225026:(+KAT); 255010:(ELV), (V); 255011:(ALV), (V); 255012:(ELV), (H); 255013:(ALV), (H)
215026											215026:(+KAT)
215014	12	245002		[2]							255010:(ELV), (V); 255011:(ALV), (V); 255012:(ELV), (H); 255013:(ALV), (H)
215014	12	245002		[2]							225018:→05.83; 215014:06.83→; 255010:(ELV), (V); 255011:(ALV), (V); 255012:(ELV), (H); 255013:(ALV), (H)
215019											215019:→05.83
215014	12	245002		[2]							225018:→09.80; 215014:01.84→; 255010:(ELV), (V); 255011:(ALV), (V); 255012:(ELV), (H); 255013:(ALV), (H)
215019											215019:→09.80
215014	12	245002		[2]							255010:(ELV), (V); 255011:(ALV), (V); 255012:(ELV), (H); 255013:(ALV), (H)
					32	265006					
215014	12	245002		[2]							255010:(ELV), (V); 255011:(ALV), (V); 255012:(ELV), (H); 255013:(ALV), (H)
215026											225026:(+KAT); 215026:(+KAT)
215014	12	245002		[2]							255010:(ELV), (V); 255011:(ALV), (V); 255012:(ELV), (H); 255013:(ALV), (H)

		cm³			
BMW					
7 (E32)					
740i,iL V8	M60B40; (210kW)	3982	04.92-09.94		
750i,iL V12	M70B50; (220kW)	4988	09.87-09.94		
7 (E38)					
728i,iL	M52B28; M52B28TU; (142kW)	2793	08.95-11.01		
730i,iL	M60B30; (155kW-160kW)	2997	10.94-11.01		
735i,iL	M62B; M62B35; (173kW)	3498	01.96-11.01		
740i,iL	M60B40; (210kW)	3982	10.94-11.01		
740i,iL	M62448S2; M62B44; M62B44TU; (210kW)	4398	01.96-11.01		
750i,iL	M73B54; (240kW)	5379	12.94-11.01		
725tds	M51D25; (105kW)	2503	04.96-11.01		
730d	M57306D1; M57D30; (135kW-142kW)	2926	08.98-11.01		
740d	M67D39; (180kW)	3901	05.99-11.01		
7 (E65/E66)					
730i,Li	M54306S3; M54B30; (170kW)	2979	03.03-		
730 i,Li	N52B30; N52B30A; (190kW)	2996	03.05-		
735i; 740i,Li; 745i; 750i,Li	N62B36; N62B40A; N62B44; N62B44A; N62B48B; (200kW-270kW)	3600-4799	11.01-		
760i,Li	N73B60; (327kW)	5972	01.03-		
730d; 730Ld	M57306D3; N57306D2; N57N306D2; (160kW-170kW)	2993	10.02-		
740d; 745 d	N67398D1; N67N448D1; N67N448D2; (190kW-242kW)	3901-4423	10.02-		
7 (F01, F02)					
740i	(240kW)	2979	10.08-		
750i; 750i xDrive	(300kW)	4395	10.08-		
760i	(400kW)	5972	09.09-		
730d	(180kW)	2993	10.08-		
740d	(225kW)	2993	09.09-		
8 (E31)					
840Ci	M60B40; (210kW)	3982	02.93-02.96		
840Ci	M62B44; M62B44TU; (210kW)	4398	01.96-12.99		
850i,Ci	M70B50; (220kW)	4988	04.90-10.94		
850Ci	M73B54; (240kW)	5379	09.94-12.99		
850CSi	M70B56; (280kW)	5576	04.93-12.96		
X1					
xDrive28i	(190kW)	2996	10.09-		
sDrive18d; sDrive20d; xDrive18d; xDrive20d; xDrive23d	(105kW-150kW)	1995	10.09-		
X3 (E83)					
2.0i; xDrive20i	N46B20; N46B20A; (110kW)	1995	07.05-		
2.5	M54256S5; M54B25; (141kW)	2494	01.04-		
2.5 si; xDrive25i	N52B25A; (160kW)	2497	09.06-		
3.0	M54306S3; M54B30; (170kW)	2979	01.04-		
3.0 si; xDrive30i	N52B30A; (200kW)	2996	09.06-		
xDrive18d	(105kW)	1995	09.08-		
2.0d	M47N204D4; (110kW)	1995	10.04-		
2.0 d; xDrive20d	N47D20A; (130kW)	1995	09.07-		
3.0 sd; 3.0d; xDrive30d; xDrive35d	M54N306D2; M57N2306D2; N57N306D5; (150kW-210kW)	2993	01.04-		
X5 (E53)					
3.0i	M54306S3; M54B30; (163kW-170kW)	2979	05.00-		
4.4i	M62B44; M62B44TU; (210kW)	4398	05.00-		

RUVILLE YOUR PARTNER

BMW

					32	265006					
	24	235001			24	265005					
					24	265010					
					16	265006					
					32	265001					
					16	265006					
					32	265001					
					24	265005					
215025					12	265007					
	24	235003			24	265002					
	24	235000 [6]									
	32	235003			32	265002					
	32	235000 [6]									
					24	265010					
		235006 [7]			24	265003					235006:(ELV)
		235007 [7]									235007:(ELV)
		235008 [7]									235008:(ELV)
		235009 [7]									235009:(ELV)
		235010 [7]									235010:(ELV)
	12	235012									235012:(ALV)
					32	265004					
					48	265004					
	24	235003			24	265002					
	24	235000 [6]									
	32	235003			32	265002					
	32	235000 [6]									
	24	235011			24	265003					
	32	235005			32	265011					
	48	235005			48	265011					
	24	235004			24	265002					235004:→09.09
	24	235013									235013:09.09→
	24	235013			24	265002					
					16	265006					
					32	265001					
	24	235001			24	265005					
					24	265005					
	24	235001			24	265005					
	12	235012			24	265003					235012:(ALV)
	16	235013			16	265002					
					16	265020					
					24	265010					
		235006 [7]			24	265003					235006:(ELV)
		235007 [7]									235007:(ELV)
		235008 [7]									235008:(ELV)
		235009 [7]									235009:(ELV)
		235010 [7]									235010:(ELV)
	12	235012									235012:(ALV)
					24	265010					
		235006 [7]			24	265003					235006:(ELV)
		235007 [7]									235007:(ELV)
		235008 [7]									235008:(ELV)
		235009 [7]									235009:(ELV)
		235010 [7]									235010:(ELV)
	12	235012									235012:(ALV)
	16	235004			16	265002					235004:→08.09
	16	235013									235013:08.09→
	16	235003			16	265002					
	16	235000 [6]									
	16	235004			16	265002					235004:→08.09
	16	235013									235013:08.09→
	24	235003			24	265002					
	24	235000 [6]									
					24	265010					
					32	265001					

6 siehe Klappseite vorn • see fold in front. 7 siehe Seite 269 • see page 269

		cm³			
BMW					
X5 (E53)					
4.4i	N62B44; N62B44A; (235kW)	4398	12.03-		
4.6is	M62B46; M67468S1; (255kW)	4619	02.02-		
4.8is	N62B48A; (265kW)	4799	04.04-		
3.0d	M57306D1; M57N306D4; (135kW-160kW)	2925-2993	05.01-		
X5 (E70)					
3.0 si; xDrive30i	N52B30; N52B30A; (200kW)	2996	02.07-		
M	(408kW)	4395	09.09-		
4.8 i; xDrive48i	N62B48B; (261kW)	4799	02.07-		
3.0 d; 3.0 sd; xDrive30d; xDrive35d	M57306D3; M57N306D5; (173kW-210kW)	2993	02.07-		
X6					
35i; xDrive35i	N54B30A; (225kW)	2979	05.08-		
50i; M; xDrive50i	(300kW-408kW)	4395	05.08-		
30d; 35d; xDrive30d; xDrive35d	N57N306D5; (173kW-210kW)	2993	05.08-		
Z1					
2.5	M20B25; (125kW)	2494	06.88-06.91	225017	
Z3					
1.8; 1.9	M43194E1; M43B18; M43B19; M43B19TU; (85kW-87kW)	1796-1895	10.95-01.03		
1.9	M44B19; (103kW)	1895	10.95-03.99		
2.0; 2.2; 2.8; 3.0	M52B; M52B20; M52B28; M52B28TU; M54226S1; M54306S3; M54B22; M54B30; (110kW-170kW)	1991-2979	04.97-06.03		
M 3.2	S50B32; (236kW)	3201	03.97-06.01		
Z4 (E85)					
2.0i	N46B20; N46B20A; (110kW)	1995	04.05-		
2.2i; 2.5i	M54226S1; M54256S5; M54B22; M54B25; (125kW-141kW)	2171-2494	02.03-		
2.5 i; 2.5 si	N52B25A; (130kW-160kW)	2497	01.06-		
3.0i	M54306S3; M54B30; (170kW)	2979	02.03-		
3.0 si	N52B30; N52B30A; (195kW)	2996	01.06-		
Z4 (E89)					
sDrive23i	(150kW)	2497	05.09-		
sDrive35i	N54B30A; (225kW)	2979	05.09-		
sDrive30i	N52B30A; (190kW)	2996	05.09-		
Z8 (E52)					
4.9	S38B49; S62B50; (294kW)	4941	06.00-06.03		
Chevrolet					
CAPTIVA					
3.2	10HM; (169kW)	3195	06.06-		
2.0 D	Z20S; (110kW)	1991	10.06-		
CRUZE					
2.0 CDI	(90kW-110kW)	1991	05.09-		

RUVILLE YOUR PARTNER

BMW → Chevrolet

					32	265004					
					32	265001					
					32	265004					
	24	235003			24	265002					
	24	235000 [6]									
		235006 [7]			24	265003					235006:(ELV)
		235007 [7]									235007:(ELV)
		235008 [7]									235008:(ELV)
		235009 [7]									235009:(ELV)
		235010 [7]									235010:(ELV)
	12	235012									235012:(ALV)
	32	235005			32	265011					
					32	265004					
	24	235003			24	265002					
	24	235000 [6]									
	24	235012			24	265003					
	32	235005			32	265011					
	24	235003			24	265002					
	24	235000 [6]									
215023	12	245006	2	255005							
215031					8	265005					
					16	265005					
					24	265010					
					24	265088					
					16	265020					
					24	265010					
		235006 [7]			24	265003					235006:(ELV)
		235007 [7]									235007:(ELV)
		235008 [7]									235008:(ELV)
		235009 [7]									235009:(ELV)
		235010 [7]									235010:(ELV)
	12	235012									235012:(ALV)
					24	265010					
		235006 [7]			24	265003					235006:(ELV)
		235007 [7]									235007:(ELV)
		235008 [7]									235008:(ELV)
		235009 [7]									235009:(ELV)
		235010 [7]									235010:(ELV)
	12	235012									235012:(ALV)
		235006 [7]			24	265003					235006:(ELV)
		235007 [7]									235007:(ELV)
		235008 [7]									235008:(ELV)
		235009 [7]									235009:(ELV)
		235010 [7]									235010:(ELV)
	12	235012									235012:(ALV)
	24	235012			24	265003					
		235006 [7]			24	265003					235006:(ELV)
		235007 [7]									235007:(ELV)
		235008 [7]									235008:(ELV)
		235009 [7]									235009:(ELV)
		235010 [7]									235010:(ELV)
	12	235012									235012:(ALV)
					32	265010					

	24	235301									
	4	235303									235303:(ELV)
	4	235304									235304:(ALV)
	4	235303									235303:(ELV)
	4	235304									235304:(ALV)

6 siehe Klappseite vorn • see fold in front. 7 siehe Seite 269 • see page 269

Chevrolet

		cm³			
EPICA					
2.0 D	(110kW)	1991	01.07-		
LACETTI					
2.0 D	Z20DM; (89kW)	1991	01.07-		
NUBIRA					
2.0 D	Z20DM; Z20S; (89kW)	1991	01.07-		

Chrysler

300 C					
2.7	2.7FX; EER; (142kW)	2736	09.04-		
3.0 CRD	M664; (160kW)	2987	09.05-		
300 M					
2.7 V6 24V	EER; (149kW-150kW)	2736	11.98-09.04		
CONCORDE					
2.7 LX	EER; (149kW)	2736	10.97-09.03		
PT CRUISER					
2.0 16V; 2.4; 2.4 16V; 2.4 GT; GT 2.4	ECC; EDV; EDZ; (104kW-164kW)	1996-2429	06.00-		
2.2 CRD	EDJ; (89kW-110kW)	2148	03.02-		
SEBRING					
2.0; 2.4; 2.4 Turbo	ECC; EDV; EDZ; (104kW-164kW)	1996-2429	04.01-		
2.7 V6 24V	EES; (149kW)	2736	04.01-		
VOYAGER III (RG)					
2.4	EDZ; (108kW)	2429	02.00-		
VOYAGER IV					
2.8 CRD	(120kW)	2768-2777	10.07-		

Citroën

AX					
11	H1A; H1B; (40kW)	1124	12.86-04.94	225901	
14 D	K9A(TUD3); K9Y(TUD3Y); (37kW-38kW)	1360	09.88-12.97		
15 D	VJY(TUD5); VJZ(TUD5); (40kW-43kW)	1527	08.94-12.97		
BERLINGO					
1.1i	HDZ(TU1M); (44kW)	1124	07.96-		
1.1i	HDZ(TU1M); HFX(TU1JP); (44kW)	1124	07.96-		
1.4	(54kW)	1360	05.05-		
1.4i	KFW(TU3JP); KFX(TU3JP); (55kW)	1360	07.96-		
1.4 i bivalent	KFW(TU3JP); (55kW)	1360	04.03-		
1.6; 1.6 16V	NFR(TU5JP4B); NFU(TU5JP4); (66kW-80kW)	1587	10.00-	225905	
1.6	(88kW)	1598	11.09-		
1.8 i; 1.8i	LFX(XU7JB); (66kW)	1761	04.97-		
1.6 HDI 75	DV6B; (55kW)	1560	07.05-		
1.6 HDi	9HT(DV6BTED4); 9HT(DV6BUTED4); (55kW)	1560	04.08-		
1.6 HDi; 1.6 HDI 90	9HX(DV6ATED4); DV6ATED4; (66kW)	1560	07.05-	225904	
1.6 HDi	9HZ-DV6TED4; DV6TED4; (80kW)	1560	08.05-	225904	
1.8 D; 1.9 D	A9A(XUD7); WJY(DW8B); WJZ(DW8); (43kW-51kW)	1769-1868	07.96-		
1.9 D	D9B(XUD9A/L); DJY(XUD9A); (50kW-51kW)	1905	07.96-	225902 225910	
2.0 HDI 90	RHY(DW10TD); (66kW)	1997	12.99-	225907	
2.0 HDi	DW10TD; (66kW)	1997	11.02-10.05		
BX					
14; 14 E	150A; 150C; K1G; (45kW-53kW)	1360	10.82-02.93	225901	
15; 16; 16 E; 19; 19 E; 19 GTi	159A; 171A; 171B; 171C; 171D; 180Z; B1A(XU51C/K); B1E(XU51C); BAY(XU5CP); BAZ(XU5CP); BDY(XU5M); BDZ(XU5M); D2A(XU92C); D2C(XU92C); D2F; D6A(XU9J2); DDZ(XU9M); DFZ(XU9J1); DKZ(XU9JA); XU52C; (53kW-90kW)	1580-1905	10.82-12.94		
19 GTi 16V	D6C(XU9J4); (116kW)	1905	09.87-12.88		

RUVILLE YOUR PARTNER

Chevrolet → Citroën

	4	235303									235303:(ELV)
	4	235304									235304:(ALV)
	4	235303									235303:(ELV)
	4	235304									235304:(ALV)
	4	235303									235303:(ELV)
	4	235304									235304:(ALV)

	24	238600									238600: EER
	24	235118			24	265165					
	24	238600									
	24	238600									
	16	238601									
					16	265140					
	16	238601									
	24	238600									
	16	238601									
	16	238604 [6]									

215912									1	295907(N)	
215901					8	265898					
215901					8	265898			1	295907(N)	
215920											215920: TU1M
215920	8	245902									215920: TU1M; 245902: TU1JP
	8	245902 [6]									
215920	8	245902									245902:P.07875→
215920	8	245902									
215909					16	265912					215909:(ELV)
215914											215914:(ALV)
		235006 [7]			8	265008					235006:(ELV); 265008:(ALV)
		235007 [7]			8	265009					235007:(ELV); 265009:(ELV)
		235008 [7]									235008:(ELV)
		235009 [7]									235009:(ELV)
		235010 [7]									235010:(ELV)
	8	235012									235012:(ALV)
216616					8	265970			1	295907(N)	
	16	235207			16	265165					265165:P.→10585
					16	268400					268400:P.10586→
	16	235207			16	268400					
215916	16	235207			16	265165					225904:P.10586→; 215916:(ELV); 265165:P.→10585
215918					16	268400					215918:(ALV); 268400:P.10586→
215916	16	235207			16	268400					215916:(ELV)
215918											215918:(ALV)
					8	265910					
215910					8	265910			1	295912(N)	215910:VP
215913											225910:VP
215906	8	235901			8	265165			1	295903(N)	
	8	235900									
									1	295903(N)	
215912											
					8	265970					
									1	295907(N)	

6 siehe Klappseite vorn • see fold in front. 7 siehe Seite 269 • see page 269

Citroën

		cm³			
BX					
18 D	161(XUD7); 161A(XUD7); (44kW)	1769	10.85-09.93	225902 225910	
TRD TURBO	A8A(XUD7TE); AJZ(XUD7TE); (66kW)	1769	03.88-12.94		
19 D	162(XUD9); D9A(XUD9); D9B(XUD9A/U); (47kW-51kW)	1905	09.83-12.94	225902 225910	
C1					
1.4 HDi	DV4D; (40kW)	1398	06.05-	225908	
C2					
1.1; 1.4	HFX(TU1JP); KFV(TU3JP); (44kW-54kW)	1124-1360	09.03-		
1.4 16V	KFU(ET3J4); (65kW)	1360	06.06-		
1.6	NFU(TU5JP4); (80kW)	1587	09.03-	225905	
1.6 VTS	NFS(TU5JP4S); (90kW)	1587	01.05-		
1.4 HDi	8HX(DV4TD); (50kW)	1398	09.03-	225908	
1.6 HDi	9HZ-DV6TED4; (80kW)	1560	09.05-	225904	
C3					
1.1; 1.4	(44kW-54kW)	1124-1360	11.09-		
1.4 16V; 1.6 16V	(70kW-88kW)	1397-1598	11.09-		
1.4 HDi	8HZ(DV4TD); (50kW)	1398	11.09-		
1.6 HDi	DV6ATED4; (66kW)	1560	11.09-		
1.6 HDi	(68kW-82kW)	1560	11.09-		
C3 (FC_, HB_)					
1.1i; 1.4; 1.4 i	HFX(TU1JP); KFV(TU3JP); (44kW-54kW)	1124-1360	02.02-		
1.4 16V	KFU(ET3J4); (65kW)	1360	12.03-		
1.6; 1.6 16V	NFU(TU5JP4); (80kW)	1587	02.02-	225905	
1.4 HDi	8HX(DV4TD); (50kW)	1398	02.02-	225908	
1.4 16V HDi	8HY(DV4TED4); (66kW)	1398	02.02-		
1.6 16V HDi	9HX(DV6ATED4); DV6TED4; (66kW-80kW)	1560	09.05-	225904	
C3 PICASSO					
1.4	(70kW)	1397	02.09-		
1.6	(88kW)	1598	02.09-		
1.6 HDi	9HX(DV6ATED4); (66kW)	1560	02.09-		
1.6 HDi	9HZ-DV6TED4; (80kW)	1560	02.09-		
C4					
1.4 16V	KFU(ET3J4); (65kW)	1360	11.04-		
1.6 16V; 1.6 16V Bio-Flex	NFU(TU5JP4); (80kW)	1587	11.04-	225905	
1.6 VTi 120	(88kW)	1598	07.08-		
1.6 THP 140	(103kW)	1598	07.08-		

RUVILLE YOUR PARTNER

Citroën

215910									1	295912(N)	215910:VP
215913											225910:VP
215902									1	295912(N)	
215910									1	295912(N)	215910:VP
215913											225910:VP
215915	8	235921			8	265165					
	8	235920									
	8	245902 [6]									
	16	235903			16	265165					
	16	235902 [6]									
215909					16	265912					215909:(ELV)
215914											215914:(ALV)
					16	265912					
215915	8	235921			8	265165					
	8	235920									
215916	16	235207			16	268400					215916:(ELV)
215918											215918:(ALV)
	8	245902 [6]									
		235006 [7]			8	265008					235006:(ELV); 265008:(ALV)
		235007 [7]			8	265009					235007:(ELV); 265009:(ELV)
		235008 [7]									235008:(ELV)
		235009 [7]									235009:(ELV)
		235010 [7]									235010:(ELV)
	8	235012									235012:(ALV)
	8	235921			8	265165					
	8	235920 [6]									
	16	235207			16	268400					
	8	235921			8	265165					
	8	235920 [6]									
	8	245902 [6]									
	16	235903			16	265165					
	16	235902 [6]									
215909					16	265912					215909:(ELV)
215914											215914:(ALV)
215915	8	235921			8	265165					
	8	235920									
	16	235207			16	265165					
215916	16	235207			16	265165					225904:P.10586→; 215916:(ELV); 265165:P.→10585
215918					16	268400					215918:(ALV); 268400:P.10586→
		235006 [7]			8	265008					265008:(ALV), EP3
		235007 [7]			8	265009					265009:(ELV), EP3
		235008 [7]									
		235009 [7]									
		235010 [7]									
		235006 [7]			8	265008					265008:(ALV), EP6
		235007 [7]			8	265009					265009:(ELV), EP6
		235008 [7]									
		235009 [7]									
		235010 [7]									
	16	235207			16	265165					265165:P.10585→
					16	268400					268400:P.10586→
	16	235207			16	268400					
	16	235903			16	265165					
	16	235902 [6]									
215909					16	265912					215909:(ELV)
215914											215914:(ALV)
		235006 [7]			8	265008					265008:(ALV), EP6
		235007 [7]			8	265009					265009:(ELV), EP6
		235008 [7]									
		235009 [7]									
		235010 [7]									
		235006 [7]			8	265008					235006:(ELV); 265008:(ALV)
		235007 [7]			8	265009					235007:(ELV); 265009:(ELV)
		235008 [7]									235008:(ELV)
		235009 [7]									235009:(ELV)

		cm³			
Citroën					
C4					
1.6 THP 140	(103kW)	1598	07.08-		
1.6 THP 150	5FX(EP6DT); (110kW)	1598	07.08-		
2.0 16V	EW10A; RFJ-EW10A; RFN(EW10J4); (100kW-103kW)	1997	11.04-		
2.0 16V	EW10J4S; RFK(EW10J4S); (130kW)	1997	11.04-		
1.6 HDi; 1.6 HDi 90; 1.6 HDi 110 FAP	9HX(DV6ATED4); 9HY(DV6TED4); 9HZ-DV6TED4; DV6TED4; (66kW-80kW)	1560	11.04-	225904	
2.0 HDi 135 FAP; 2.0 HDi 135 FFAP	DW10BTED4; RHR(DW10BTED4); (100kW)	1997	11.04-		
2.0 HDi	(103kW)	1997	07.08-		
C4 GRAND PICASSO					
1.6 VTi 120	(88kW)	1598	07.08-		
1.6 THP 140	(103kW)	1598	07.08-		
1.6 16V	5FX(EP6DT); (110kW)	1598	10.08-		
1.8 i 16V; 2.0 i 16V	6FY-EW7A; RFJ-EW10A; (92kW-103kW)	1749-1997	10.06-		
1.6 HDi 110FAP	9HY(DV6TED4); 9HZ-DV6TED4; (80kW)	1560	10.06-	225904	
2.0 HDi 135 FAP	RHJ-DW10BTED4; RHR(DW10BTED4); (100kW)	1997	10.06-		
2.0 HDi	(110kW)	1997	07.09-		
C4 PICASSO					
1.6 VTi 120	(88kW)	1598	07.08-		
1.6 THP 140	(103kW)	1598	07.08-		
1.6 16V	5FX(EP6DT); (110kW)	1598	07.08-		
1.8 16V; 2.0 16V	6FY-EW7A; RFJ-EW10A; (92kW-103kW)	1749-1997	02.07-		
1.6 HDi 110FAP	9HY(DV6TED4); 9HZ-DV6TED4; (80kW)	1560	02.07-	225904	
2.0 HDi 138 FAP	RHJ-DW10BTED4; RHR(DW10BTED4); (100kW)	1997	02.07-		
2.0 HDi	(110kW)	1997	07.09-		
C5 (DC_, DE_)					
1.8 16V; 2.0 16V	6FZ(EW7J4); RFN(EW10J4); (85kW-100kW)	1749-1997	03.01-08.04		
2.0 16V HPi	RLZ(EW10D); (103kW)	1997	03.01-08.04		
3.0 V6	XFX(ES9J4S); (152kW)	2946	03.01-08.04		
2.0 HDi	RHY(DW10TD); (66kW)	1997	03.01-08.04	225907	
2.0 HDi	RHS(DW10ATED); RHZ(DW10ATED); (79kW-80kW)	1997	03.01-08.04	225907	
2.2 HDi	4HX(DW12TED4/FAP); (98kW)	2179	03.01-08.04		
C5 (RC_, RE_)					
1.8 16V; 2.0 16V	6FY-EW7A; 6FZ(EW7J4); EW10A; RFJ-EW10A; (85kW-103kW)	1749-1997	09.04-		
3.0 V6	XFV(ES9A); XFX(ES9J4S); (152kW)	2946	09.04-		
1.6 HDi	9HY(DV6TED4); DV6TED4; (80kW)	1560	09.04-	225904	
2.0 HDi	DW10BTED4; RHR(DW10BTED4); (100kW)	1997	09.04-		
2.2 HDi	4HX(DW12TED4/FAP); (98kW)	2179	09.04-		
2.2 HDi	4HT(DW12BTED4); (125kW)	2179	04.06-		
C5 (TD_, RD_)					
1.6 16V	(115kW)	1598	04.09-		
1.8 16V; 2.0 16V; 2.0 16V BioFlex	6FY-EW7A; EW10A; RFJ-EW10A; (92kW-103kW)	1749-1997	02.08-		
3.0 V6	XFU(ES9A); (155kW)	2946	02.08-		

RUVILLE YOUR PARTNER

Citroën

		235010 [7]									235010:(ELV)
	8	235012									235012:(ALV)
	16	235012			16	265008					265008: EP6DT
					16	265903					
					16	265911					
215916	16	235207			16	265165					225904:P.10586→; 215916:(ELV); 265165:P.→10585
215918					16	268400					215918:(ALV); 268400:P.10586→
	16	235906 [6]							1	295903(N)	235906:P.→11108
	8	236602			16	266601					236602:(ALV)
	8	236603									236603:(ELV)
		235006 [7]			8	265008					265008:(ALV), EP6
		235007 [7]			8	265009					265009:(ELV), EP6
		235008 [7]									
		235009 [7]									
		235010 [7]									
		235006 [7]			8	265008					235006:(ELV); 265008:(ALV)
		235007 [7]			8	265009					235007:(ELV); 265009:(ELV)
		235008 [7]									235008:(ELV)
		235009 [7]									235009:(ELV)
		235010 [7]									235010:(ELV)
	8	235012									235012:(ALV)
	16	235012			16	265008					235012: EP6DT; 265008: EP6DT
					16	265903					
215916	16	235207			16	268400					215916:(ELV)
215918											215918:(ALV)
	16	235906 [6]							1	295903(N)	235906:P.→11108
	8	236602			16	266601					236602:(ALV)
	8	236603									236603:(ELV)
		235006 [7]			8	265008					265008:(ALV), EP6
		235007 [7]			8	265009					265009:(ELV), EP6
		235008 [7]									
		235009 [7]									
		235010 [7]									
		235006 [7]			8	265008					235006:(ELV); 265008:(ALV)
		235007 [7]			8	265009					235007:(ELV); 265009:(ELV)
		235008 [7]									235008:(ELV)
		235009 [7]									235009:(ELV)
		235010 [7]									235010:(ELV)
	8	235012									235012:(ALV)
	16	235012			16	265008					
					16	265903					
215916	16	235207			16	268400					215916:(ELV)
215918											215918:(ALV)
	16	235906 [6]							1	295903(N)	235906:P.→11108
	8	236602			16	266601					236602:(ALV)
	8	236603									236603:(ELV)
					16	265903					
	16	235911			16	265165					
	16	235910 [6]									
					24	265905					
215906	16	235901			16	265165			1	295903(N)	
	16	235900									
215906	8	235901			8	265165			1	295903(N)	
	8	235900									
	16	235906 [6]							1	295903(N)	
					16	265903					
					24	265905					
215916	16	235207			16	265165					225904:P.10586→; 215916:(ELV); 265165:P.→10585
215918					16	268400					215918:(ALV); 268400:P.10586→
	16	235906 [6]							1	295903(N)	235906:P.→11108
	16	235906 [6]							1	295903(N)	
	16	236600			16	266602			1	295903(N)	
	16	235012			16	265008					235012: EP6CDT; 265008: EP6CDT
					16	265903					
					24	265905					

6 siehe Klappseite vorn • see fold in front. 7 siehe Seite 269 • see page 269

		cm³			
Citroën					
C5 (TD_, RD_)					
1.6 HDi	9HZ-DV6TED4; DV6TED4; (80kW)	1560	02.08-	225904	
2.0 HDi	DW10BTED4; RHR(DW10BTED4); (100kW)	1997	02.08-		
2.0 HDi	(103kW)	1997	04.09-		
2.0 HDi	(120kW)	1997	04.09-		
2.2 HDi	4HT(DW12BTED4); (125kW)	2179	02.08-		
2.7 HDi	DT17ED4; UHZ(DT17BTED4); (150kW)	2720	02.08-		
3.0 HDi	DT20C; (177kW)	2992	04.09-		
C6					
3.0 V6	ES9J4S; XFV(ES9A); (155kW)	2946	09.05-		
2.2 HDi 173 FAP	4HT(DW12BTED4); (125kW)	2179	06.06-		
2.7 HDi 205 FAP	DT17ED4; UHZ(DT17BTED4); (150kW)	2720	09.05-		
3.0 HDi	DT20C; (177kW)	2992	04.09-		
C8					
2.0; 2.0 16V; 2.2	3FZ(EW12J4); RFJ-EW10A; RFN(EW10J4); (100kW-116kW)	1997-2230	07.02-		
3.0 V6	XFX(ES9J4S); (150kW)	2946	07.02-		
2.0 HDi	RHM(DW10ATED4); RHT(DW10ATED4); RHW(DW10ATED4); (79kW)	1997	07.02-		
2.0 HDi	RHK(DW10UTED4); (88kW)	1997	02.07-		
2.0 HDi	RHR(DW10BTED4); (100kW)	1997	03.06-		
2.2 HDi	4HW(DW12TED4); (94kW)	2179	07.02-		
2.2 HDi	4HT(DW12BTED4); (125kW)	2179	06.06-		
C15					
1.8 D	161A(XUD7); (44kW)	1769	07.86-12.00	225902 225910	
C2 ENTERPRISE					
1.4 HDi	(50kW)	1398	04.09-		
C25					
1.9 D	D9B(XUD9A/U); (51kW)	1905	07.87-02.94	225902 225910	
C-CROSSER					
2.2 HDi	(115kW)	2179	02.07-		
C-CROSSER ENTERPRISE					
2.2 HDi	(115kW)	2179	01.09-		
DISPATCH					
2.0; 2.0i 16V	RFN(EW10J4); (100kW-102kW)	1997	03.00-		
1.9 D	WJZ(DW8); (51kW)	1868	04.98-		
1.9 D; 1.9 TD	D8B(XUD9TF); D9B(XUD9A/U); DHX(XUD9TF/BTF); (51kW-68kW)	1905	10.95-	225902 225910	
2.0 HDi	RHX; RHX(DW10BTED); RHZ(DW10ATED); (69kW-80kW)	1997	10.99-	225907	
DS3					
1.4 16V; 1.6 16V	(70kW-88kW)	1397-1598	04.10-		
1.6 16V	(115kW)	1598	04.10-		
1.6 HDi	(68kW-82kW)	1560	11.09-		
EVASION (22,U6)					
1.8	LFZ(XU7JP); (73kW)	1761	05.97-07.02		
2.0 16V	RFN(EW10J4); (100kW)	1997	05.00-07.02		
2.0	RFU(XU10J2/C); (89kW)	1998	06.94-07.02		
2.0 16V	RFV(XU10J4R); (97kW)	1998	05.98-04.00		
2.0 TURBO C.T.	RGX(XU10J2TE); (108kW)	1998	06.94-07.02		
1.9 TD	D8B(XUD9TF); DHX(XUD9TF/BTF); (66kW-68kW)	1905	11.94-07.02	225902 225910	
2.0 HDi	RHZ(DW10ATED); (80kW)	1997	08.99-07.02	225907	
2.0 HDI 16V	RHW(DW10ATED4); (80kW)	1997	09.99-07.02		
2.0 TD	(68kW)	1998	05.97-07.02		
2.1 TD	P8C(XUD11BTE); (80kW)	2088	05.96-07.02		

RUVILLE YOUR PARTNER

Citroën

215916	16	235207			16	268400					215916:(ELV)
215918											215918:(ALV)
	16	235906 [6]							1	295903(N)	235906:P.→11108
	8	236602			16	266601					236602:(ALV)
	8	236603									236603:(ELV)
	8	236602			16	266601					236602: DW10CTED4, (ALV); 266601: DW10CTED4
	8	236603									236603: DW10CTED4, (ELV)
	16	236600			16	266602			1	295903(N)	
	24	235202			24	265165					
	24	235908 [6]									
	24	235908 [6]									235908: DT20C
					24	265905					
	16	236600			16	266602					
	24	235202			24	265165					
	24	235908 [6]									
	24	235908 [6]									235908: DT20C
					16	265903					
					24	265905					
	16	235906 [6]							1	295903(N)	
	16	235906 [6]							1	295903(N)	235906:P.11074→, P.→11108
	16	235906 [6]							1	295903(N)	235906:P.→11108
	16	235906 [6]							1	295903(N)	
	16	236600			16	266602			1	295903(N)	
215910					8	265910			1	295912(N)	215910:VP
215913											225910:VP
	8	235921			8	265165					
	8	235920 [6]									
215910									1	295912(N)	215910:VP
215913											225910:VP
	16	236600			16	266602					
	16	236600			16	266602					
					16	265903					
					8	265910					
215910					8	265910			1	295912(N)	215910:VP
215913											225910:VP
215906	8	235901			8	265165			1	295903(N)	
	8	235900									
		235006 [7]			8	265008					235006:(ELV); 265008:(ALV)
		235007 [7]			8	265009					235007:(ELV); 265009:(ELV)
		235008 [7]									235008:(ELV)
		235009 [7]									235009:(ELV)
		235010 [7]									235010:(ELV)
	8	235012									235012:(ALV)
	16	235012			16	265008					235012: EP6CDT; 265008: EP6CDT
	8	235921			8	265165					
	8	235920 [6]									
215908					8	265970			1	295907(N)	
					16	265903					
215919					8	265970			1	295907(N)	
					16	265950					
					8	265970			1	295901(N)	295901(N):(ST)
215910					8	265910			1	295912(N)	215910:VP
215913											225910:VP
215906	8	235901			8	265165			1	295903(N)	
	8	235900									
	16	235906 [6]							1	295903(N)	
									1	295903(N)	
215904					12	265907			1	295912(N)	

6 siehe Klappseite vorn • see fold in front. 7 siehe Seite 269 • see page 269

Citroën

		cm³			
JUMPER					
2.2 HDi 100; 2.2 HDi 120	(74kW-88kW)	2198	04.06-		
JUMPER (230)					
2.0	RFW(XU10J2U); (80kW)	1998	02.94-04.02		
1.9 D	DJY(XUD9A); (50kW)	1905	07.99-04.02		
1.9 D	D9B(XUD9A/U); (51kW)	1905	02.94-04.02	225902 225910	
1.9 TD	DHX(XUD9TF/BTF); (66kW)	1905	03.94-04.02	225902 225910	
1.9 TD	D8C(XUD9UTF); (66kW)	1905	08.94-04.02		
1.9 TD	D8C(XUD9UTF); (68kW)	1905	02.94-04.02		
2.0 HDi	DW10UTD; (62kW)	1997	11.01-04.02		
2.5 D	T9A(DJ5); (63kW)	2446	03.94-04.02		
2.5 TD	T8A(DJ5T); (76kW)	2446	03.94-04.02		
2.5 TDi	THX(DJ5TED); (79kW)	2446	12.96-04.02	225903	
2.8 HDi	8140.43S; (94kW)	2798	09.00-04.02		
JUMPER (244)					
2.0; 2.0 bivalent	XU10J2; (81kW)	1998	04.02-		
2.0 HDi	DW10UTD; (62kW)	1997	04.02-		
2.2 HDi	(74kW)	2179	02.02-06.06		
2.2 HDi	DW12TED; (74kW)	2179	04.02-	225907	
2.8 HDi	8140.43N; 8140.43S; (94kW-107kW)	2798-2800	04.02-		
JUMPY					
2.0; 2.0 i; 2.0i 16V	RFH(EW10A); RFN(EW10J4); (100kW-103kW)	1997	03.00-		
1.6 HDi 90	(66kW)	1560	01.07-		
1.9 D	WJZ(DW8); (51kW)	1868	04.98-		
1.9 D; 1.9 TD	D8B(XUD9TF); D9B(XUD9A/U); DHX(XUD9TF/BTF); (51kW-68kW)	1905	10.95-	225902 225910	
2.0 HDi	RHX; RHX(DW10BTED); RHZ(DW10ATED); (69kW-80kW)	1997	10.99-	225907	
2.0 HDi 120	RHK(DW10UTED4); (88kW)	1997	01.07-		
2.0 HDi 140	RHR(DW10BTED4); (100kW)	1997	01.07-		
LNA					
1.1	109/5E; (37kW)	1124	07.82-04.85	225901	
NEMO					
1.4	(54kW)	1360	02.08-		
1.4 HDi	(50kW)	1399	02.08-	225908	
RELAY (230)					
2.0	RFW(XU10J2U); (80kW)	1998	02.94-04.02		
1.9 D	DJY(XUD9A); (50kW)	1905	07.99-04.02		
1.9 D	D9B(XUD9A/U); (51kW)	1905	02.94-04.02	225902 225910	
1.9 TD	DHX(XUD9TF/BTF); (66kW)	1905	03.94-04.02	225902 225910	
1.9 TD	D8C(XUD9UTF); (66kW)	1905	08.94-04.02		
1.9 TD	D8C(XUD9UTF); (68kW)	1905	02.94-04.02		
2.0 HDi	DW10UTD; (62kW)	1997	11.01-04.02		
2.5 D	T9A(DJ5); (63kW)	2446	03.94-04.02		
2.5 TD	T8A(DJ5T); (76kW)	2446	03.94-04.02		
2.5 TDi	THX(DJ5TED); (79kW)	2446	12.96-04.02	225903	
2.8 HDi	8140.43S; (94kW)	2798	09.00-04.02		
RELAY (244)					
2.0; 2.0 bivalent	XU10J2; (81kW)	1998	04.02-		
2.0 HDi	DW10UTD; (62kW)	1997	04.02-		
2.2 HDi	(74kW)	2179	02.02-06.06		
2.2 HDi	DW12TED; (74kW)	2179	04.02-	225907	
2.8 HDi	8140.43N; 8140.43S; (94kW-107kW)	2798-2800	04.02-		
SAXO (S0,S1)					
1.1 X,SX	HDZ(TU1M); (40kW)	1124	05.96-09.03		
1.1 X,SX	HDZ(TU1M); HFX(TU1JP); (44kW)	1124	05.96-09.03		
1.4 SX	KFW(TU3JP); KFX(TU3JP); (55kW)	1360	05.96-06.03		
1.6; 1.6 VTL,VTR	NFZ(TU5JP); (65kW-66kW)	1587	02.96-06.03		

RUVILLE YOUR PARTNER

Citroën

	1	235208 [6]									
215919					8	265970					
					8	265910					
215910					8	265910			1	295912(N)	215910:VP
215913											225910:VP
215910					8	265910			1	295912(N)	215910:VP
215913											225910:VP
					8	265910					
					8	265910					
	8	235901			8	265165			1	295903(N)	
	8	235900 [6]									
215903					12	265907					
215905					12	265907					
215907					8	266600					
215801											
215919					8	265970					
	8	235901			8	265165			1	295903(N)	
	8	235900 [6]									
	8	235901			8	265165					
	8	235900 [6]									
215906	8	235901			8	265165			1	295903(N)	
	8	235900									
215801											
					16	265903					
					16	268400					
					8	265910					
215910					8	265910			1	295912(N)	215910:VP
215913											225910:VP
215906	8	235901			8	265165			1	295903(N)	
	8	235900									
	16	235901							1	295903(N)	235901:P.11023→
	16	235906 [6]							1	295903(N)	235906:P.→11108
215912											
	8	245902 [6]									
215915	8	235921			8	265165					225908: DV4TED; 215915: DV4TED; 235921: DV4TED; 265165: DV4TED
	8	235920									235920: DV4TED
215919					8	265970					
					8	265910					
215910					8	265910			1	295912(N)	215910:VP
215913											225910:VP
215910					8	265910			1	295912(N)	215910:VP
215913											225910:VP
					8	265910					
					8	265910					
	8	235901			8	265165			1	295903(N)	
	8	235900 [6]									
215903					12	265907					
215905					12	265907					
215907					8	266600					
215801											
215919					8	265970					
	8	235901			8	265165			1	295903(N)	
	8	235900 [6]									
	8	235901			8	265165					
	8	235900 [6]									
215906	8	235901			8	265165			1	295903(N)	
	8	235900									
215801											
215920											215920: TU1M
215920	8	245902									215920: TU1M; 245902: TU1JP
215920	8	245902									245902:P.07728→
	8	245902 [6]									245902:P.07875→

6 siehe Klappseite vorn • see fold in front.

		cm³			
Citroën					
SAXO (S0,S1)					
1.6 VTS	NFX(TU5JP4); (87kW)	1587	06.96-09.03		
1.5 D	VJY(TUD5); VJZ(TUD5); (40kW-42kW)	1527	09.96-09.03		
SYNERGIE (22,U6)					
1.8	LFZ(XU7JP); (73kW)	1761	05.97-07.02		
2.0 16V	RFN(EW10J4); (100kW)	1997	05.00-07.02		
2.0	RFU(XU10J2/C); (89kW)	1998	06.94-07.02		
2.0 16V	RFV(XU10J4R); (97kW)	1998	05.98-04.00		
2.0 TURBO C.T.	RGX(XU10J2TE); (108kW)	1998	06.94-07.02		
1.9 TD	D8B(XUD9TF); DHX(XUD9TF/BTF); (66kW-68kW)	1905	11.94-07.02	225902 225910	
2.0 HDi	RHZ(DW10ATED); (80kW)	1997	08.99-07.02	225907	
2.0 HDI 16V	RHW(DW10ATED4); (80kW)	1997	09.99-07.02		
2.0 TD	(68kW)	1998	05.97-07.02		
2.1 TD	P8C(XUD11BTE); (80kW)	2088	05.96-07.02		
VISA					
11 E; 14; 14 GT; II Super X	109/5; 109/5F; 109K; 129/5; 150B(XY8); 150D(XY7); (35kW-58kW)	1124-1360	09.78-03.91	225901	
17 D	161A(XUD7); (44kW)	1769	04.84-03.91	225902 225910	
XANTIA (X1)					
1.6i	BFZ(XU5JP); (65kW)	1580	03.93-01.98		
1.8i	LFX(XU7JB); (66kW)	1761	04.97-01.98		
1.8i	LFZ(XU7JP); (74kW)	1761	03.93-01.98		
1.8i 16V	LFY(XU7JP4); (81kW)	1761	06.95-01.98		
2.0i	RFX(XU10J2C); (89kW)	1998	03.93-01.98		
2.0i 16V	RFV(XU10J4R); (97kW)	1998	06.95-01.98		
2.0 TURBO	RGX(XU10J2TE); (108kW)	1998	06.95-01.98		
2.0i 16V	RFT(XU10J4/Z); RFY(XU10J4/Z); (110kW-112kW)	1998	03.93-01.98		
2.9i 24V	XFZ(ES9J4); (140kW)	2946	01.97-01.98		
1.9 D	D9B(XUD9A/L); DJZ(XUD9Y); (50kW-51kW)	1905	06.94-01.98	225902 225910	
1.9 D	DHW(XUD9SD); (55kW)	1905	02.96-01.98		
1.9 TD	D8B(XUD9TF); DHX(XUD9TF/BTF); DHY(XUD9TE/Y); (66kW)	1905	10.94-01.98	225902 225910	
2.1 TD 12; 2.1 TD 12V	P8C(XUD11BTE); (80kW)	2088	06.95-01.98		
XANTIA (X2)					
1.8i	LFX(XU7JB); (66kW)	1761	01.98-04.03		
1.8i 16V	LFY(XU7JP4); (81kW)	1761	01.98-04.03		
2.0i	RFX(XU10J2C); (89kW)	1998	01.98-04.03		
2.0i 16V	RFV(XU10J4R); (97kW)	1998	01.98-04.03		
2.0 TURBO	RGX(XU10J2TE); (108kW)	1998	01.98-04.03		
3.0 V6	XFZ(ES9J4); (140kW)	2946	01.98-04.03		
1.9 D; 1.9 SD	DHW(XUD9SD); (55kW)	1905	01.98-04.03		
1.9 TURBO D	D8B(XUD9TF); DHX(XUD9TF/BTF); DHY(XUD9TE/Y); (66kW)	1905	01.98-04.03	225902 225910	
2.0 HDi; 2.0 HDI 90	RHY(DW10TD); RHZ(DW10ATED); (66kW-80kW)	1997	02.99-04.03	225907	
2.1 TURBO D 12V	P8C(XUD11BTE); (80kW)	2088	01.98-02.99		
XM (Y3)					
2.0; 2.0i	RDZ(XU10MZ); XU102C; (79kW-84kW)	1998	05.89-04.94		
2.0i	RFZ(XU10J2); (89kW)	1998	05.89-06.94		
2.0 TURBO; 2.0i TURBO	RGY(XU10J2TE/Z); (104kW)	1998	09.92-06.94		
3.0 V6	SFZ(ZPJ/Z); UFZ(ZPJ/Z); (123kW)	2963	05.89-06.94		
3.0 V6 24V	SKZ(ZPJ4/Z); UKZ(ZPJ4/Z); (147kW)	2963	07.90-06.94		
2.1 TD 12V	P8A(XUD11ATE); P8C(XUD11BTE); PHZ(XUD11ATE); PJZ(XUD11ATE); (80kW)	2088	05.89-06.94		
2.1 D 12V	P9A(XUD11A); (60kW)	2138	05.89-06.94		
XM (Y4)					
2.0i 16V	RFV(XU10J4R); (97kW)	1998	05.94-10.00		
2.0 TURBO	RGX(XU10J2TE); RGY(XU10J2TE/Z); (108kW)	1998	05.94-10.00		
3.0 V6	XFZ(ES9J4); (140kW)	2946	04.97-10.00		
3.0 V6	SFZ(ZPJ/Z); UFZ(ZPJ/Z); (123kW)	2963	05.94-10.00		
3.0 V6 24V	SKZ(ZPJ4/Z); UKZ(ZPJ4/Z); (147kW)	2963	05.94-10.00		
2.1 TD 12V	P8A(XUD11ATE); P8C(XUD11BTE); PHZ(XUD11ATE); PJZ(XUD11ATE); (80kW)	2088	05.94-10.00		
2.1 D12	P9A(XUD11A); (60kW)	2138	07.94-06.96		
2.5 TD	THY(DK5ATE); (95kW)	2446	05.94-10.00		

RUVILLE YOUR PARTNER

Citroën

					16	265904					265904:(L3)
					16	265905					265905:(L4)
215901					8	265898			1	295907(N)	
215908					8	265970			1	295907(N)	
					16	265903					
215919					8	265970			1	295907(N)	
					16	265950					
					8	265970			1	295901(N)	295901(N):(ST)
215910					8	265910			1	295912(N)	215910:VP
215913											225910:VP
215906	8	235901			8	265165			1	295903(N)	
	8	235900									
	16	235906 [6]							1	295903(N)	
									1	295903(N)	
215904					12	265907			1	295912(N)	
215912											
215910									1	295912(N)	215910:VP
215913											225910:VP
215908					8	265970			1	295907(N)	
216616					8	265970			1	295907(N)	
215908					8	265970			1	295907(N)	
					16	265950					265950:P.07364→
215919					8	265970					
					16	265950					265950:P.07360→
					8	265970			1	295901(N)	295901(N):(ST)
									2	295907(N)	
					24	265901					
215910					8	265910			1	295912(N)	215910:VP
215913											225910:VP
					8	265910					
215910					8	265910			1	295912(N)	215910:VP
215913											225910:VP
215904					12	265907			1	295912(N)	
216616					8	265970			1	295907(N)	
					16	265901					
					16	265950					
215919					8	265970					
					16	265950					
					8	265970			1	295901(N)	295901(N):(ST)
					24	265901					
					8	265910					
215910					8	265910			1	295912(N)	215910:VP
215913											225910:VP
215906	8	235901			8	265165			1	295903(N)	
	8	235900									
215904					12	265907			1	295912(N)	
					8	265970					
215919					8	265970					
					8	265970					
					12	265906					
					24	265906					
215904					12	265907			2	295912(N)	
					12	265907			2	295912(N)	
					16	265950					265950:P.07360→
					8	265970			1	295901(N)	295901(N): RGX, (ST)
					24	265901					
					12	265906					
					24	265906					
215904					12	265907			1	295912(N)	295912(N): P8A, P8C
					12	265907			2	295912(N)	
					12	265907					

6 siehe Klappseite vorn • see fold in front.

		cm³			
Citroën					
XSARA					
1.4i	KFW(TU3JP); KFX(TU3JP); (55kW)	1360	04.97-08.05		
1.6i	NFZ(TU5JP); (65kW)	1587	04.97-09.00		
1.6 16V	NFU(TU5JP4); (80kW)	1587	09.00-08.05	225905	
1.8i	LFX(XU7JB); (66kW)	1761	04.97-09.00		
1.8i	LFZ(XU7JP); (74kW)	1761	04.97-09.00		
1.8i 16V	LFY(XU7JP4); (81kW)	1761	04.97-09.00		
2.0 16V	RFN(EW10J4); (100kW)	1997	09.00-08.05		
2.0 16V	RFV(XU10J4R); (97kW)	1998	07.98-09.00		
1.4 HDi	8HX(DV4TD); (50kW)	1398	01.03-08.05	225908	
1.5 D	VJZ(TUD5); (42kW)	1527	04.97-09.00		
1.8 TD	(66kW)	1761	10.97-09.00		
1.8 D	161A(XUD7); A9A(XUD7); (43kW)	1769	04.97-09.00	225902 225910	
1.9 D	WJY(DW8B); WJZ(DW8); (51kW)	1868	07.98-08.05		
1.9 D	DJY(XUD9A); (50kW)	1905	04.97-09.00	225902 225910	
1.9 D	DHV(XUD9BSD); (55kW)	1905	01.98-09.00		
1.9 TD	DHY(XUD9TE/Y); (66kW)	1905	04.97-09.00	225902 225910	
2.0 HDI 90; 2.0 HDI 109	RHY(DW10TD); RHZ(DW10ATED); (66kW-80kW)	1997	02.99-08.05	225907	
XSARA PICASSO					
1.6	NFZ(TU5JP); (65kW)	1587	12.99-		
1.6 16V	NFU(TU5JP4); (80kW)	1587	09.05-	225905	
1.8 16V	6FZ(EW7J4); LFY(XU7JP4); (85kW)	1749	02.00-		
2.0 16V	RFN(EW10J4); (100kW)	1997	01.03-		
1.6 HDi	DV6TED4; (66kW-80kW)	1560	05.04-	225904	
2.0 HDi	RHY(DW10TD); (66kW)	1997	12.99-	225907	
ZX					
1.1	HDZ(TU1M); (44kW)	1124	03.91-06.97		
1.4i	KDX(TU3M/Z); KDY(TU3M); KDZ(TU3M/Z); KFX(TU3JP); (55kW)	1360	03.91-10.97		
1.6i	BDY(XU5M); BFZ(XU5JP); (65kW)	1580	03.91-10.97		
1.8i	LFZ(XU7JP); (74kW)	1761	07.92-10.97		
1.8i 16V	LFY(XU7JP4); (81kW)	1761	01.96-02.98		
1.9i	DKZ(XU9JA); (88kW)	1905	03.91-06.97		
2.0i	RFX(XU10J2C); (89kW)	1998	07.92-06.97		
2.0i 16V	RFT(XU10J4/Z); (110kW)	1998	06.94-06.97		
2.0i 16V	RFT(XU10J4/Z); RFY(XU10J4/Z); (112kW)	1998	07.92-10.94		
1.8 D; 1.9 D; 1.9 TD	161A(XUD7); D9B(XUD9A/U); DHY(XUD9TE/Y); DJZ(XUD9Y); (44kW-66kW)	1769-1905	03.91-10.97	225902 225910	
Dacia					
DUSTER					
1.6 16V; 1.6 16V 4x4	(77kW)	1598	04.10-		
LOGAN					
1.6	K7M710; (64kW)	1598	09.04-		
1.6 16V	K4M690; K7M690; (77kW)	1598	02.06-		
SANDERO					
1.6	K7M710; (64kW)	1598	06.08-		
Daewoo					
ESPERO					
1.5 16V	(65kW)	1498	10.93-09.94		
1.5i 16V	A15MF; (66kW)	1498	02.95-06.99		
1.8i; 2.0; 2.0i	C18LE; C20LE; C20LZ; (66kW-81kW)	1796-1998	10.91-09.99		
LANOS					
1.4; 1.5	A14SMS; A15SMS; Y15L; (55kW-63kW)	1349-1498	05.97-		
1.6 16V	A16DMS; (78kW)	1598	05.97-		
LEGANZA					
2.0 16V	X20SED; (98kW)	1998	06.97-12.02		
NEXIA					
1.5	G15MF; (44kW-55kW)	1498	02.95-08.97		

RUVILLE YOUR PARTNER

Citroën → Daewoo

215920	8	245902									245902:P.07875→
	8	245902 [6]									245902:P.07875→
215909					16	265912					215909:(ELV)
215914											215914:(ALV)
216616					8	265970			1	295907(N)	
215908					8	265970			1	295907(N)	
					16	265950					
					16	265903					
					16	265950					
215915	8	235921			8	265165					
	8	235920									
215901					8	265898			1	295907(N)	
					8	265970					
215910					8	265910			1	295912(N)	215910:VP
215913											225910:VP
					8	265910					
215910					8	265910			1	295912(N)	215910:VP
215913											225910:VP
					8	265910					
215910					8	265910			1	295912(N)	215910:VP
215913											225910:VP
215906	8	235901			8	265165			1	295903(N)	
	8	235900									
	8	245902 [6]									
215909					16	265912					215909:(ELV)
215914											215914:(ALV)
					16	265970					265970: XU7JP4; 265903: EW7J4
					16	265903					
215916	16	235207			16	265165					225904:P.10586→; 215916:(ELV); 265165:P.→10585
215918					16	268400					215918:(ALV); 268400:P.10586→
215906	8	235901			8	265165			1	295903(N)	
	8	235900									
215920											
215920											215920: TU3JP
215908					8	265970			1	295907(N)	265970: XU5JP; 295907(N): XU5JP
215908					8	265970			1	295907(N)	
					16	265950					265950:P.07364→
					8	265970					
215919					8	265970					
									2	295907(N)	
									1	295907(N)	295907(N):→06.93
									2	295907(N)	295907(N):06.93→
215910					8	265910			1	295912(N)	215910:VP
215913											225910:VP

	16	235501			16	265503					
	16	235500 [6]									
215507											
	16	235501			16	265503					
	16	235500 [6]									
215507											

					16	265306					
					16	265309					
					8	265306					
	8	235340			8	265306					
					16	265309					
					16	265309					
	8	235340			8	265306			1	295310(N)	

6 siehe Klappseite vorn • see fold in front.

		cm³			
Daewoo					
NEXIA					
1.5 16V	A15MF; (66kW)	1498	02.95-08.97		
NUBIRA					
1.6 16V; 2.0 16V	A16DMS; X20SED; Z20L; (78kW-98kW)	1598-1998	05.97-		
Daimler					
DAIMLER (X300)					
4.0 Six	9JPFRB; (177kW)	3980	09.94-		
Dodge					
NITRO					
2.8 CRD	ENR; ENS; (130kW)	2777	06.07-		
Fiat					
127					
1.0; 1.0 Sport; 1.3 Sport	127A.000; 127A1.000; 127A3.000; (37kW-55kW)	1049-1301	01.77-12.86		
1.3 D	127A5.000; (33kW)	1301	04.81-12.86		
128					
1.1; 1.3; 1.3 Rally; 1.3 Sport	128A.000; 128A.048; 128A1.000; 128AC.000; 128AC5.000; (33kW-55kW)	1116-1290	03.69-12.84		
130					
3.2	130B.000; (121kW)	3235	10.71-03.78		
131					
1.4 Mirafiori; 1.6 SUPER; 2.0 RACING; 2.0 SUPER	131B2.000; 131C.000; 131C1.000; 131C3.000; 131C4.000; (51kW-85kW)	1367-1995	03.78-12.84		
132					
1.7 GLS; 2.0; 2.0 i.e.	132B1.000; 132C2.000; 132C3.000; (82kW-90kW)	1756-1995	11.75-12.82		
500					
1.4; 1.4 Abarth	169A3.000; 312A1.000; (74kW-99kW)	1368	10.07-		
1.3 D Multijet	169A1.000; (55kW)	1248	10.07-	225801	
1.3 D Multijet	199B1.000; (70kW)	1248	12.09-		
500 C					
1.2	169A4.000; (51kW)	1242	09.09-		
1.4	169A3.000; (74kW)	1368	09.09-		
1.3 D Multijet	169A1.000; (55kW)	1248	09.09-	225801	
1.3 D Multijet	199B1.000; (70kW)	1248	09.09-		
ARGENTA (132A)					
1600; 2000; 2000 i.e.	132C2.000; 132C3.000; 132D.000; 132D1.000; (66kW-90kW)	1585-1995	06.78-07.86		
BARCHETTA (183)					
1.8 16V	183A1.000; 188A6.000; (96kW)	1747	04.95-		
BRAVA (182)					
1.2 16V 80	182B2.000; 188A5.000; (59kW-60kW)	1242	12.98-10.01		
1.4	182A3.000; 182A5.000; (55kW-59kW)	1370	10.95-10.01		
1.6 16V; 1.8 GT 16V	182A2.000; 182A4.000; 182A6.000; (66kW-83kW)	1581-1747	10.95-10.01		
2.0	182B7.000; (113kW)	1998	09.98-08.00		
1.9 TD 100 S; 1.9 TD 75 S	182A7.000; 182A8.000; (55kW-74kW)	1910	03.96-10.01		
1.9 JTD; 1.9 JTD 105	182B4.000; 182B9.000; (74kW-77kW)	1910	12.98-10.01		
1.9 D	160A7.000; (48kW)	1929	10.95-10.01		
BRAVO (182)					
1.2 16V 80	188A5.000; (59kW)	1242	10.00-10.01		
1.2 16V 80	182B2.000; (60kW)	1242	12.98-10.00		
1.4	182A3.000; 182A5.000; (55kW-59kW)	1370	10.95-10.01		
1.6 16V	182A4.000; 182A6.000; (66kW-76kW)	1581	10.95-10.01		
1.6	182B6.000; (76kW)	1596	09.00-02.02		
1.8 GT 16V	182A2.000; (83kW)	1747	10.95-10.01		
2.0 HGT 20V	182A1.000; (108kW)	1998	10.95-07.98		
2.0 HGT 20V	182B7.000; (113kW)	1998	07.98-10.01		
1.9 TD 100 S; 1.9 TD 75 S	182A7.000; 182A8.000; (55kW-74kW)	1910	03.96-10.01		
1.9 JTD; 1.9 JTD 105	182B4.000; 182B9.000; (74kW-77kW)	1910	12.98-10.01		
1.9 D	160A7.000; (48kW)	1929	10.95-10.01		
BRAVO (198)					
1.4; 1.4 T-Jet	192B2.000; 198A1.000; 198A4.000; (66kW-110kW)	1368	04.07-		
1.6 D Multijet	(77kW)	1598	03.08-		
1.6 D Multijet	198A2.000; (88kW)	1598	03.08-		

RUVILLE YOUR PARTNER

Daewoo → Fiat

					16	265309					
					16	265309					
					24	268300					
	16	238604 [6]									
					8	265802					
					8	265802					265802: 084830→
					8	265802					
					12	265802					
					8	265802					
					8	265802					
					16	265812					
215805	16	235809			16	265809					215805:(ALV)
215807											215807:(ELV)
	16	235809			16	265809					
					8	265815					
					16	265812					
215805	16	235809			16	265809					215805:(ALV)
215807											215807:(ELV)
	16	235809			16	265809					
					8	265802					
					16	265805					
215808					16	265807					215808:(ELV)
215810											
					16	265801					265801: →0215502
					16	265805					265805: 0215503→
					20	265805					
					8	265802					
215804					8	265802					
					8	265802					
					16	265807					
215808					16	265807					215808:(ELV)
215810											
					16	265801					265801: →0215502
					16	265805					265805: 0215503→
					16	265801					
					16	265801					265801: →0215502
					16	265805					265805: 0215503→
					20	265801					
					20	265805					
					8	265802					
215804					8	265802					
					8	265802					
					16	265812					
	16	235302			16	265809					235302: 198A3000; 265809: 198A3000
	16	235302			16	265809					

6 siehe Klappseite vorn • see fold in front.

		cm³			
Fiat					
BRAVO (198)					
1.9 D Multijet	192B5.000; (66kW)	1910	04.07-12.08		
1.9 D Multijet	192A8.000; (88kW)	1910	04.07-		
1.9 D Multijet	937A5.000; (110kW)	1910	04.07-		
2.0 D Multijet	(121kW)	1956	09.08-		
CINQUECENTO (170)					
0.9; 0.9 i.e.; 0.9 i.e. S	1170A1.000; 1170A1.046; 170A1.000; 170A1.046; (29kW-30kW)	899-903	07.91-07.99		
1.1 Sporting	176B2.000; (40kW)	1108	10.94-01.98		
COUPE (FA/175)					
1.8 16V	183A1.000; (96kW)	1747	03.96-08.00		
2.0 16V; 2.0 16V TURBO	175A1.000; 836A3.000; (102kW-140kW)	1995	11.93-08.96		
2.0 20V	182A1.000; (108kW)	1998	08.96-04.98		
2.0 20V; 2.0 20V TURBO	175A3.000; 182B3.000; (113kW-162kW)	1998	08.96-08.00		
CROMA (154)					
1600; 2000 CHT	154A.048; 154A1.000; (61kW-66kW)	1585-1995	12.85-12.90		
2000 CHT	(74kW)	1995	01.91-09.92		
2000 i.e.	154C3.000; 154C3.046; 834B.000; 834B.048; 834B.146; (83kW-88kW)	1995	03.86-08.96		
2000 16V	154E1.000; (101kW)	1995	08.92-08.96		
2000 i.e. TURBO	154A2.000; 154C4.046; 834C.146; (110kW-114kW)	1995	12.85-08.96		
1900 TURBO D i.d.; 2000 TD i.d.	154C6.000; 154D1.000; (66kW-69kW)	1929	05.89-12.96		
2500 TD	8144.97; 8144.97.2400; 8144.97Y; (85kW)	2500	05.89-08.96		
CROMA (194)					
1.9 D Multijet	939A7.000; (85kW)	1910	06.05-		
1.9 D Multijet	939A1.000; (88kW)	1910	06.05-		
1.9 D Multijet	939A2.000; (110kW)	1910	06.05-		
2.4 D Multijet	939A3.000; (147kW)	2387	06.05-		
DOBLO (119, 223)					
1.2	223A5.000; (48kW)	1242	03.01-		
1.6	182B6.000; (68kW)	1596	09.02-		
1.6 16V; 1.6 Natural Power	182B6.000; (76kW)	1596	10.01-		
1.3 JTD 16V	188A9.000; (51kW)	1248	05.04-	225801	
1.3 D Multijet; 1.3 JTD	199A2.000; (55kW)	1248	05.05-		
1.3 D Multijet	223A9.000; (62kW)	1248	10.05-	225801	
1.9 D	223A6.000; (46kW)	1910	03.01-		
1.9 JTD	182B9.000; 223B2.000; (74kW)	1910	10.01-		
1.9 JTD	223A7.000; 223B1.000; (77kW)	1910	07.03-		
1.9 D Multijet	186A9.000; (88kW)	1910	10.05-		
DOBLO (152, 263)					
1.4	843A1.000; (70kW)	1368	02.10-		
1.3 D Multijet	199A3.000; (66kW)	1248	02.10-		
1.6 D Multijet; 2.0 D Multijet	(74kW-99kW)	1598-1956	02.10-		
DUCATO (230)					
2.0	RFW; (80kW)	1998	03.94-04.02		
1.9 D; 1.9 TD	D9B; DHX; DJY; (50kW-66kW)	1905	04.98-04.02		
1.9 D; 1.9 D Combinato; 1.9 TD; 1.9 TD CAT	230A2.000; 230A3.000; 230A4.000; (51kW-60kW)	1929	03.94-04.02		
2.0 JTD	RHV; (62kW)	1997	10.01-04.02	225907	
2.8 JTD; 2.8 TDI	8140.43; 8140.43S; (90kW-94kW)	2798-2800	10.97-04.02		
DUCATO (244)					
2.0; 2.0 Bipower	RFL; (81kW)	1998	04.02-		
2.0 JTD	RHV; (62kW)	1997	04.02-	225907	
2.8 JTD	8140.43S; (94kW)	2798	04.02-		
DUCATO (250)					
100 Multijet 2,2 D	4HV; (74kW)	2198	07.06-		
DUCATO (280)					
1.9 D; 1.9 TD	149B1.000; 280A1.000; (52kW-60kW)	1929	02.87-08.90		
DUCATO (290)					
1.9 D; 1.9 TD	149B1.000; 280A1.000; (52kW-60kW)	1929	03.89-03.94		
2.5 TD; 2.5 TDI	8140.27; (70kW)	2500	07.90-03.94		
DUNA					
60 1.1; 70 1.3	146A5.000; 146A6.000; (43kW-49kW)	1116-1301	01.87-12.91		

RUVILLE YOUR PARTNER

Fiat

					8	265802					
216000					8	265802					
	16	235302			16	265809					235302: 5192517→; 265809: 4654872→
	16	235807									235807: 4654872-5192516
	16	235302			16	265809					
					8	265804 [5]					265804: →9127269
					8	265806 [5]					265806: →9127269
215811					8	265898			1	295801(N)	
					16	265801					265801: →0215502
					16	265805					265805: 0215503→
					16	265802					
					20	265801					
					20	265805					
					8	265802					
					8	265802					265802: 154A1.000, 154C5.000
					8	265802					
					16	265802					
					8	265802					
					8	265802					
215801											215801: 8144.97Y
					8	265802					
216000					8	265802					
	16	235302			16	265809					235302: 5192517→; 265809: 4654871→
	16	235807									235807: 4654872-5192516
	20	235302			20	265809					
215811					8	265898					215811: →2533528
					16	265801					
					16	265805					
215805	16	235809			16	265809					215805:(ALV)
215807											215807:(ELV)
	16	235809			16	265809					
215805	16	235809			16	265809					215805:(ALV)
215807											215807:(ELV)
215802					8	265802					
216000					8	265802					
216000					8	265802					265802: 223A7.000
216000					8	265802					
					16	265812					
	16	235809			16	265809					
	16	235302			16	265809					
					8	265970					
215910					8	265910			1	295912(N)	265910:VET.0007998→
					8	265960					265960:VET.→0007997
					8	265802					
215906	8	235901			8	265165					
	8	235900									
215801											
					8	265970					
215906	8	235901			8	265165					
	8	235900									
215801											
	1	235208 [6]									
					8	265802					
					8	265802					
215801											215801: 1197078→
					8	265802					

5, 6 siehe Klappseite vorn • see fold in front.

		cm³			
Fiat					
DUNA					
DS 1.7	149B3.000; (44kW)	1698	01.87-12.91		
FIORINO (127)					
1050	127A.000; (37kW)	1049	01.80-12.87		
FIORINO (146)					
60 1.1; 70 i.e. 1.4; 75 i.e. 1.5; 75 i.e. 1.6; 1.4; 1.6	146A9.000; 146C5.000; 146C6.000; 146D5.000; 146D6.000; 149C1.000; (40kW-55kW)	1116-1581	05.88-05.01		
60 1.7 D; 65 1.7 TD; 1.7 D; 1.7 TD	146B2.000; 146D7.000; 149B3.000; (42kW-46kW)	1697-1698	05.88-05.01		
FIORINO (147)					
1.0	(37kW)	1036	10.82-10.87		
1.1	(41kW)	1036	09.87-12.88		
1.0	127A.000; (37kW)	1049	01.80-12.87		
1.0	156A.000; (41kW)	1049	12.86-04.88		
1.1; 1.3; 1.5	146A5.000; 146A9.000; 149C1.000; (40kW-55kW)	1116-1499	11.86-08.93		
1.3 D	127A5.000; (33kW)	1288-1302	03.82-12.88		
FIORINO (225)					
1.4	(54kW)	1360	02.08-		
1.4 Natural Power	(57kW)	1368	01.10-		
1.3 D Multijet	199A2.000; (55kW)	1248	02.08-		
GRANDE PUNTO (199)					
1.2	199A4.000; (48kW)	1242	10.05-		
1.4 16V; 1.4 T-Jet	198A4.000; 199A6.000; (70kW-88kW)	1368	10.05-		
1.4 Abarth	(114kW)	1368	12.07-		
1.3 D Multijet	199A2.000; 199A3.000; (55kW-66kW)	1248	10.05-	225801	
1.9 D Multijet	199A5.000; 939A1.000; (88kW-96kW)	1910	10.05-		
IDEA					
1.2	188A5.000; (59kW)	1242	01.04-		
1.4	192B2.000; 843A1.000; (66kW-70kW)	1368	12.03-		
1.3 D Multijet; 1.3 JTD	188A9.000; 199A3.000; (51kW-66kW)	1248	01.04-	225801	
1.9 JTD	188B2.000; (74kW)	1910	01.04-		
LINEA					
1.4 T-Jet	198A4.000; (88kW)	1368	09.07-		
1.3 D Multijet	199A3.000; (66kW)	1248	06.07-	225801	
1.6 D Multijet	(77kW)	1598	06.09-		
MAREA (185)					
1.2 16V	182B2.000; (60kW)	1242	10.98-		
1.4 12V	182A3.000; (59kW)	1370	09.96-		
1.6	185A3.000; (68kW)	1581	03.99-08.00		
1.6 16V	182A4.000; (76kW)	1581	09.96-		
1.6 100 16V Bipower	185A3.000; 186A4.000; (76kW)	1581	04.99-		
1.6	182B6.000; (76kW)	1596	09.00-08.02		
1.8 16V	182A2.000; (83kW)	1747	09.96-		
2.0 20V	182A1.000; (108kW)	1998	09.96-04.99		
2.0 150 20V; 2.0 20V	182B7.000; 185A8.000; (110kW-113kW)	1998	04.99-		
1.9 TD 100; 1.9 TD 75	182A7.000; 182A8.000; 182B9.000; (55kW-74kW)	1910	09.96-		
1.9 JTD; 1.9 JTD 110	182B4.000; 186A6.000; (77kW-81kW)	1910	04.99-		
2.4 TD 125	185A2.000; (91kW)	2387	09.96-04.99		
2.4 JTD	185A6.000; 839A5.000; (96kW)	2387	04.99-		
MULTIPLA (186)					
1.6; 1.6 16V; 1.6 16V Bipower; 1.6 16V Blupower; 1.6 16V Blupower (186AGB1A)	182A4.000; 182B6.000; 186A3.000; 186A4.000; (70kW-76kW)	1581-1596	04.99-		
1.9 JTD; 1.9 JTD 110; 1.9 JTD 115	182B4.000; 186A6.000; 186A8.000; (77kW-85kW)	1910	04.99-		
1.9 JTD (186AXE1A)	186A9.000; (88kW)	1910	04.02-		
PALIO					
1.2	178E2.000; 188A4.000; (44kW-50kW)	1242	06.99-		
1.2	176A8.000; 178B5.000; 178E2.000; (54kW)	1242	04.96-		
1.2	188A5.000; (59kW)	1242	09.01-		
1.4	178B2.000; 178B2.016; (51kW)	1372	04.96-		
1.6 16V	178B3.000; (74kW)	1581	04.96-		
1.6 16V	182B6.000; (76kW)	1596	02.01-		

RUVILLE YOUR PARTNER

Fiat

					8	265802					
					8	265802					
					8	265802					
					8	265802					
					8	265802					
					8	265802					
					8	265802					265802:12.87→, →04.88
					8	265802					
					8	265802					265802:12.87→
					8	265802					
					8	265802					
	8	245902 [6]									
					8	265815					
	16	235809			16	265809					
					8	265815					
					16	265812					
					16	265812					265812: 199A8000
215805	16	235809			16	265809					215805:(ALV)
215807											215807:(ELV)
216000					8	265802					
215808					16	265807					215808:(ELV); 265807: →985541
215809					16	265812					215809:(ALV), →09.04; 265812: 985542→
					16	265807					265807: →984713
					16	265812					265812: 984714→
215805	16	235809			16	265809					215805:(ALV)
215807											215807:(ELV)
216000					8	265802					
					16	265812					
215805	16	235809			16	265809					215805:(ALV)
215807											215807:(ELV)
	16	235302			16	265809					235302: 198A3000; 265809: 198A3000
215808					16	265807					215808:(ELV)
215810											
					16	265801					265801: →0215503
					16	265805					265805: 0215504→
					16	265801					265801: →0215502
					16	265805					265805: 0215503→
					16	265801					265801: →0215503
					16	265805					265805: 0215504→
					16	265801					
					16	265801					265801: →0215502
					16	265805					265805: 0215503→
					20	265801					
					20	265805					
					8	265802					
215804					8	265802					
					8	265802					
					10	265802					
					16	265801					265801: →0215503
					16	265805					265805: 0215504→
215804					8	265802					
216000					8	265802					
					8	265898					
					8	265898			1	295801(N)	
					16	265807					265807: →985541
					16	265812					265812: 985542→
					8	265802					
					16	265805					
					16	265801					

6 siehe Klappseite vorn • see fold in front.

		cm³			
PALIO					
1.3 JTD Multijet	188A9.000; (51kW)	1248	06.03-		
1.7 TD	176A3.000; (51kW)	1698	04.96-03.01		
1.9 D	223A6.000; (46kW)	1910	09.00-		
1.9 JTD EL	188A2.000; (59kW)	1910	09.01-		
PANDA (141)					
650	141A.000; (22kW)	652	01.82-07.04		
750	141B.000; (25kW)	764-770	01.86-01.95		
750	156A4.000; 156A4.048; (25kW)	770	01.86-12.97		
900	1170A1.046; (29kW)	899	04.92-12.96		
1000	156A2.100; 156A3.100; (32kW)	999	01.86-04.92		
1000; 1000 i.e.	141C2.000; 156A2.246; (33kW)	999	05.86-02.04		
1000	156A3.000; (37kW)	999	01.85-12.92		
1100	156C.046; (37kW)	1108	05.91-07.04		
1100	176B2.000; 187A1.000; (40kW)	1108	02.95-07.04		
1300 D	156A5.000; (27kW)	1302	04.86-12.92		
PANDA (169)					
1.2 LPG	188A4.000; (44kW)	1242	04.09-		
1.4	169A3.000; (74kW)	1368	10.06-		
1.3 D Multijet; 1.3 JTD	169A1.000; 188A9.000; (51kW-55kW)	1248	09.03-	225801	
PUNTO (176)					
55 1.1; 60 1.2	176A6.000; 176A7.000; 176B2.000; (40kW-43kW)	1108-1242	09.93-06.00		
60 1.2	176B1.000; 176B4.000; (44kW)	1242	03.94-06.00		
75 1.2	176A8.000; (54kW)	1242	10.93-09.99		
85 1.2 16V	176B9.000; (63kW)	1242	04.97-06.00		
90 1.6; 1.4 GT TURBO	176A4.000; 176A9.000; 176B6.000; (65kW-98kW)	1372-1581	01.94-09.99		
1.7 D	176B3.000; (42kW)	1698	04.94-02.00		
60 1.7 D; 1.7 TD	176A3.000; 176B7.000; (46kW-51kW)	1698	01.94-09.99		
1.7 TD	176A5.000; (52kW)	1698	01.94-02.00		
PUNTO (188)					
1.2 60	188A4.000; (44kW)	1242	09.99-		
1.2 16V 80	188A5.000; (59kW)	1242	09.99-		
1.4	843A1.000; (70kW)	1368	09.03-		
1.8 16V 130 HGT	183A1.000; 188A6.000; (96kW)	1747	09.99-		
1.3 JTD; 1.3 JTD 16V	188A9.000; (51kW)	1248	06.03-	225801	
1.9 D 60; 1.9 DS 60; 1.9 JTD; 1.9 JTD 80	188A2.000; 188A3.000; 188A7.000; (44kW-63kW)	1910	09.99-		
1.9 JTD	188B2.000; (74kW)	1910	06.03-		
PUNTO EVO					
1.2; 1.4	199A4.000; 350A1.000; (48kW-57kW)	1242-1368	10.09-		
1.4 16V	955A2.000; 955A6.000; (77kW-99kW)	1368	10.09-		
1.3 D Multijet	199A2.000; 199A3.000; 199A9.000; 199B1.000; (55kW-70kW)	1248	10.09-		
1.6 D Multijet	955A3.000; (88kW)	1598	10.09-		
QUBO					
1.4	(54kW)	1360	09.08-		
1.4 Natural Power	(57kW)	1368	01.10-		
1.3 D Multijet	199A2.000; (55kW)	1248	09.08-		
REGATA					
70 1.3; 70 1.3 i.e.; 75 1.5	138B2.000; 138B3.048; 138C3.048; 149A3.000; 149A7.000; (48kW-55kW)	1301-1498	09.83-07.89		
75 1.5	138B3.048; 138C3.048; (55kW)	1498	09.84-07.89		
75 1.5 i.e.; 85 1.5; 85 1.5 SUPER; 85 1.6; 90 1.6 i.e.; 100 1.6 i.e.; 100 1.6 Super; 100 i.e. 1.6	138B3.000; 138C2.048; 149A.000; 149A2.000; 149A4.000; 149A5.000; 149C1.000; 149C2.000; 149C3.000; (55kW-74kW)	1498-1595	09.83-12.90		
60 1.7 D; 65 1.9 D	138B6.000; 149A1.000; 149B3.000; (43kW-48kW)	1698-1929	09.83-12.89		
RITMO BERTONE					
85 1.5	138B3.000; (60kW)	1498	03.83-12.86		
RITMO I (138A)					
60 1.0; 65 1.3; 70 1.3; 75 1.3; 75 1.5; 75 1.5 i.e.; 85 1.5; 90 i.e. 1.6; 105 1.6 Sport; 125 2.0 TC Abarth	127A6.000; 138A1.000; 138A2.000; 138A3.000; 138A4.000; 138AR.000; 138AR1.000; 138C2.048; 138C3.048; 149A3.000; 149A7.000; 149C1.000; 149C2.000; (44kW-92kW)	1049-1995	01.78-12.87		
55 D 1.7	138A5.000; (40kW-43kW)	1714	10.79-09.82		
RITMO II (138A)					
60 1.1; 65 1.3; 75 1.5; 85 1.5; 90 i.e. 1.5; 100 1.6; 105 1.6; 125 TC Abarth 2.0; 130 TC Abarth 2.0	138A2.000; 138AR.000; 138AR1.000; 138AR2.000; 138B.000; 138B1.000; 138B2.000; 138B3.000; 138C1.000; 138C2.048; 146A4.048; 149A4.000; 149A5.000; 149C1.000; (40kW-96kW)	1116-1995	10.82-12.88		
60 D 1.7	138C.000; 149B3.000; (44kW)	1698	05.85-12.87		

RUVILLE YOUR PARTNER

Fiat

	16	235809			16	265809					
					8	265802					
215802					8	265802					
					8	265802					
					8	265898					
					8	265804 [5]					265804:VET.→1155044
					8	265806 [5]					265806:VET.→1155044
					8	265898					
					8	265804 [5]					265804:VET.→1155044
					8	265806 [5]					265806:VET.→1155044
					8	265898			1	295801(N)	
					8	265898			1	295801(N)	265898: 156A2.246
					8	265898			1	295801(N)	
					8	265898			1	295801(N)	
215811					8	265898			1	295801(N)	215811: 176B2.000
					8	265802					
					8	265815					
					16	265812					
215805	16	235809			16	265809					215805:(ALV)
215807											215807:(ELV)
215811					8	265898			1	295801(N)	
215811					8	265898			1	295801(N)	215811: 176B1.000
					8	265898			1	295801(N)	
					16	265807					
					8	265802					
					8	265802					
					8	265802			1	295801(N)	
					8	265802					
					8	265898					
215808					16	265807					215808:(ELV); 265807: →985541
					16	265812					265812: 985542→
					16	265807					265807: →984713
					16	265812					265812: 984714→
					16	265805					
215805	16	235809			16	265809					215805:(ALV)
215807											215807:(ELV)
					8	265802					
216000					8	265802					
					8	265815					
	4	235802			8	265812					235802:(ELV)
	16	235809			16	265809					
	16	235302			16	265809					
	8	245902 [6]									
					8	265815					
	16	235809			16	265809					
					8	265802					
					8	265802					265802: 138B3.048
					8	265802					
					8	265802					
					8	265802					
					8	265802					
					8	265802					
					8	265802					
					8	265802					265802: 149B3.000

5, 6 siehe Klappseite vorn • see fold in front.

		cm³			
Fiat					
RITMO II (138A)					
60 D 1.7; 80 1.9 TD	138B6.000; 831D1.000; (43kW-59kW)	1714-1929	10.82-12.87		
SCUDO (220)					
1.6	220A2.000; (58kW)	1581	02.96-		
2.0; 2.0 16V	RFN; (100kW)	1997	05.00-		
1.9 D	WJZ; (51kW)	1868	04.98-		
1.9 D; 1.9 TD	D8B; D9B; DHX; (51kW-68kW)	1905	02.96-		
2.0 JTD	RHX; RHZ; (69kW-80kW)	1997	12.99-	225907	
SCUDO (272)					
1.6 D Multijet	(66kW)	1560	01.07-		
2.0 D Multijet	RHK; (88kW)	1997	01.07-		
2.0 D Multijet	RHR; (100kW)	1997	01.07-		
SEDICI					
1.9 D Multijet	D19AA; (88kW)	1910	06.06-		
SEICENTO (187)					
1.1	176B2.000; 187A1.000; (40kW)	1108	01.98-		
1.1	176B2.000; (40kW)	1108	01.98-		
SIENA					
1.2	178B5.000; (54kW)	1242	09.98-		
1.4	(57kW)	1368	01.07-		
1.4	178B2.000; 178B2.016; (51kW)	1372	04.96-		
1.6 16V	178B3.000; (78kW)	1581	09.98-		
1.3 JTD	188A9.000; (51kW)	1248	09.03-	225801	
1.7 GL	176A3.000; (51kW)	1697	02.06-		
1.9	223A6.000; (46kW)	1910	11.00-		
STILO (192)					
1.2 16V	188A5.000; (59kW)	1242	02.02-		
1.4 16V	192B2.000; 843A1.000; (66kW-70kW)	1368	01.04-		
1.6 16V; 1.8 16V	182B6.000; 192A4.000; (76kW-98kW)	1596-1747	10.01-		
2.4 20V	192A2.000; (125kW)	2446	10.01-		
1.9 JTD	192A3.000; (59kW)	1910	02.02-		
1.9 D	192B5.000; (66kW)	1910	09.04-		
1.9 D Multijet; 1.9 JTD; 1.9 JTD (192AXS1B, 192BXS1B)	192A1.000; 192A8.000; 192A9.000; 192B5.000; 937A7.000; (66kW-88kW)	1910	10.01-		
1.9 JTD	192A5.000; 192B1.000; 937A4.000; (93kW-103kW)	1910	09.03-		
1.9 D Multijet	937A5.000; (110kW)	1910	09.05-		
STRADA (178E)					
1.2	188A4.000; (44kW)	1242	04.03-		
1.2	178B5.000; (54kW)	1242	06.99-		
1.3 D Multijet	223A9.000; (62kW)	1248	05.06-		
1.7 TD	176A3.000; (51kW)	1698	06.99-		
1.9 D	223A6.000; (46kW)	1910	12.00-		
1.9 JTD	188A2.000; (59kW)	1910	04.03-		
TALENTO (290)					
1.9 D	149B1.000; (52kW)	1929	03.89-03.94		
TEMPRA (159)					
1.4 i.e.; 1.6 i.e.	159A2.000; 159A3.046; 159A3.048; 160A1.046; 835C1.000; 836A4.000; (51kW-57kW)	1372-1581	06.90-08.96		
1.6 i.e. S.W.	159A3.046; 835C1.000; (57kW)	1581	10.90-08.96		
1.6; 1.6 i.e.; 1.8 i.e.	159A3.000; 159A4.046; 159B9.000; 835C2.000; 835C4.000; 836A5.000; (63kW-77kW)	1581-1756	03.90-08.96		
1.8 i.e.	(81kW)	1756	03.90-08.96		
2.0 i.e.	159A6.046; (83kW)	1995	10.90-08.96		
1.9 D; 1.9 TD	149A1.000; 160A6.000; 160A7.000; 160B6.046; 160D1.000; (48kW-66kW)	1929	05.90-08.96		
TIPO (160)					
1.1	160A3.000; (41kW)	1108	01.88-10.91		
1.4; 1.4 i.e.; 1.6; 1.6 i.e.; 1.8 i.e.	149C2.046; 159A3.046; 159A3.048; 159A4.000; 159A4.046; 160A1.000; 160A1.046; 160A1.048; 160A2.000; 835C1.000; 835C2.000; 835C4.000; 836A4.000; (51kW-77kW)	1372-1756	07.87-04.95		
1.8 16V i.e.	160A5.000; (100kW)	1756	11.89-06.92		
2.0 i.e.	159A5.046; 159A6.046; (80kW-83kW)	1995	03.90-04.95		
2.0 16V; 2.0 i.e. 16V SPORT	160A8.046; 836A3.000; (102kW-107kW)	1995	07.91-04.95		

RUVILLE YOUR PARTNER

Fiat

					8	265802					
					8	265802					
					16	265903					
215910					8	265910					265910:VET.0007998→
					8	265960					265960:VET.→0007997
215910					8	265910			1	295912(N)	265910:VET.0007998→
					8	265960					265960:VET.→0007997
215906	8	235901			8	265165					
	8	235900									
	16	235207			8	268400					235207: 9HU; 268400: 9HU
	16	235906 [6]							1	295903(N)	235906:VET.11023→, VET.→11109
	16	235906 [6]									
216000					8	265802					
215811					8	265898			1	295801(N)	215811: 176B2.000; 265898: 176B2.000
											265898: 187A1.000, →2543171
215811					8	265898			1	295801(N)	215811: 176B2.000; 265898: 176B2.000
					8	265898			1	295801(N)	
					8	265815					
					8	265802					
					16	265805					
215805	16	235809			16	265809					215805:(ALV)
215807											215807:(ELV)
					8	265802					
215802											
215808					16	265807					215808:(ELV)
215809											215809:(ALV), →09.04
					16	265807					265807: →984713
					16	265812					265812: 984714→
					16	265805					
					20	265805					
216000					8	265802					
					8	265802					
216000					8	265802					
	16	235807			16	265809					235807: 4654872→; 265809: 4654872→
	16	235302			16	265809					235302: 5192517→; 265809: 4654872→
	16	235807									235807: 4654872-5192516
					8	265898					
					8	265898			1	295801(N)	265898: →2546254
	16	235809			16	265809					
					8	265802					
215802					8	265802					
					8	265802					
					8	265802					
					8	265802					
					8	265802					265802: 159A3.046
					8	265802					
					8	265802					265802: 159A4.000
					8	265802					
					8	265802					
					8	265898					
					8	265802					
					16	265802					265802:01.90→
					8	265802					
					16	265802					

6 siehe Klappseite vorn • see fold in front.

		cm³			
Fiat					
TIPO (160)					
1.7 D; 1.9 D; 1.9 TD	149A1.000; 149B4.000; 160A6.000; 160A6.046; 160A7.000; 160B6.046; 160D1.000; (43kW-66kW)	1697-1929	01.88-08.96		
ULYSSE (179)					
2.0	RFN; (100kW)	1997	08.02-		
3.0 V6	XFW; (150kW)	2946	08.02-		
2.0 JTD	RHM; RHW; (79kW-80kW)	1997	08.02-		
2.0 D Multijet	RHK; (88kW)	1997	05.06-		
2.0 D Multijet	RHR; (100kW)	1997	05.06-		
2.2 JTD	4HW; (94kW)	2179	08.02-		
2.2 D Multijet	(125kW)	2179	03.08-		
ULYSSE (220)					
1.8	LFW; (73kW)	1761	05.97-08.02		
2.0 16V	RFN; (100kW)	1997	09.00-08.02		
2.0	RFU; (89kW)	1998	06.94-08.02		
2.0 16V	RFV; (97kW)	1998	05.98-09.00		
2.0 TURBO	RGX; (108kW)	1998	06.94-08.02		
1.9 TD	DHX; (66kW)	1905	02.95-08.02		
2.0 JTD	RHZ; (80kW)	1997	10.99-08.02		
2.1 TD	P8C; (80kW)	2088	03.96-10.99		
UNO (146A/E)					
45 1.0; 45 1.0 i.e.	156A2.048; 156A2.100; 156A2.246; (32kW-37kW)	999	04.84-10.95		
50 1.1; 50 1.1 i.e.	146C3.000; 156C.046; (36kW-37kW)	1108-1116	01.90-12.93		
1.3 TURBO i.e.; 1.4 TURBO i.e.; 50 1.1; 55 1.1; 60 1.1 (EG); 70 1.3; 70 1.4 i.e.; 75 1.5 i.e.	138B.000; 138B2.000; 138C2.048; 146A2.000; 146A2.146; 146A2.246; 146A4.044; 146A4.048; 146A8.000; 146A8.046; 149A7.000; 149C1.000; 160A1.046; (37kW-87kW)	1116-1499	01.83-12.96		
1.3 D SUPER	127A5.000; 146B1.000; (33kW)	1302	06.83-03.92		
1.9 D; 60 1.7 D; 70 1.4 TD	146B.000; 146B2.000; 146B3.000; 149B3.000; 149B5.046; (42kW-52kW)	1367-1929	07.86-03.94		
X 1/9 (128 AS)					
1.3 X1/9; 1.3 X1/9 "EXCLUSIV SERIE"	128AS.000; (54kW-55kW)	1290	05.73-12.79		
1.5 X1/9 FIVE SPEED	138BS.031; (56kW)	1499	06.85-12.89		
1.5 X1/9 FIVE SPEED	138AS.000; (63kW)	1499	11.78-12.89		
Ford					
CAPRI II					
1.6	LAC; LCE; LEC; (50kW-65kW)	1593	02.74-12.77	225215	
2.0	OHCTL20H; (72kW)	1993	04.74-12.77	225221	
CAPRI III					
1.6	LCN; (54kW)	1593	01.78-04.87	225215	
2.0	NEN; OHCTL20H; (74kW)	1993	01.78-12.85	225221	
C-MAX					
1.6 TDCi	(66kW-80kW)	1560	02.07-	225904	
1.8 TDCi	KKDA; (85kW)	1753	02.07-		
2.0 TDCi	(100kW)	1997	02.07-		
CORTINA					
1600 GT	LCJ; (63kW)	1593	10.70-03.72	225215	
ESCORT III					
1.1	GSE; (37kW)	1117	08.83-12.85		
1.1	GLB; GMA; (40kW)	1117	09.80-08.83	225213	
1.1; 1.3; 1.3 Cabriolet; 1.6	GPA; JPA; LP1; LPA; (43kW-58kW)	1117-1597	09.80-12.85	225213	
1.6	L4B; (66kW)	1597	07.85-12.85	225214	
1.6	LUA; (71kW)	1597	09.80-10.82	225213	
1.6 RS TURBO; 1.6 XR3i; 1.6i	LNA; LR1; LRA; (77kW-97kW)	1597	10.82-12.85	225214	
1.6 D	LTA; (40kW)	1608	02.84-12.85		
ESCORT IV					
1.1	GSG; (37kW)	1117	10.85-09.90	225217	
1.3	JBB; JLA; JLB; (44kW)	1297	01.86-07.90	225201 225217	
1.3	JBA; (46kW)	1297	07.88-10.90	225201	
1.4; 1.6	F6B; F6D; FUA; FUC; LP2; (54kW-58kW)	1392-1597	01.86-07.90	225213	
1.6	L4B; (66kW)	1597	01.86-07.90	225214	
1.6	LJB; (75kW)	1597	08.89-07.90	225203	
1.6 TURBO RS; 1.6 XR3i	LNB; LR2; LRB; (77kW-97kW)	1597	01.86-07.90	225214	
1.6	LUG; (65kW)	1598	04.89-07.90	225213	

RUVILLE YOUR PARTNER

Fiat → Ford

					8	265802					
					16	265903					
					24	265905					
	16	235906 [6]									
	16	235906 [6]									235906:VET.11075→, VET.→11109
	16	235906 [6]									235906:VET.→11109
	16	235906 [6]									
	16	236600			16	266602					
					8	265970					
					16	265903					
					8	265970			1	295907(N)	
					16	265901					
					8	265970			1	295907(N)	295907(N):(ST)
215910					8	265910			1	295912(N)	265910:VET.0007998→
					8	265960					265960:VET.→0007997
	8	235901			8	265165					
	8	235900 [6]									
					12	265907			1	295912(N)	
					8	265898					
					8	265898					
					8	265802					
					8	265802					265802: 127A5.000
					8	265802					
					8	265802					265802: 038435→
											265802: 2170826→
					8	265802					
					8	265802					265802:(5-M.T.)

215212	8	235204							1	295225(N)	
215218	8	235204							1	295225(N)	
215212	8	235204							1	295225(N)	
215218	8	235204							1	295225(N)	
215916	16	235207			16	268400					215916:(ELV)
215918											215918:(ALV)
					8	265230					
	16	235906 [6]									235906:→09.07
215212	8	235204							1	295225(N)	
215202					8	265208					
215202					8	265208			1	295218(N)	225213: GMA; 215202: GLB; 265208: GLB; 295218(N): GMA
215208											215208: GMA
215208									1	295218(N)	
215210									1	295218(N)	
215208									1	295218(N)	
215210									1	295218(N)	
					8	265230			1	295250(N)	
					8	265208					225217:→08.88
215201					8	265208					225201: JBB; 215201: JBB
											225217: JLA, JLB
215201					8	265208					
215208									1	295218(N)	
215210									1	295218(N)	
215203									1	295218(N)	
215210									1	295218(N)	
215208									1	295218(N)	

6 siehe Klappseite vorn • see fold in front.

		cm³			
ESCORT IV					
1.6	L4B; (66kW)	1598	01.86-05.90	225214	
1.6 D	LTC; (40kW)	1608	01.86-01.89		
1.7 D; 1.8 D	RTA; RTB; (44kW)	1753	01.89-07.90	225219	
ESCORT V					
1.3	J4B; J6A; (44kW)	1299	07.90-09.92	225201	
1.4; 1.6	F6F; F6G; LUJ; LUK; (52kW-66kW)	1392-1598	07.90-12.92	225213	
1.6	LJF; (77kW)	1598	07.90-12.92	225203	
1.8 16V; 1.8 16V XR3i	RDA; RQB; (77kW-96kW)	1796	02.92-12.92		
2.0 16V RS	N7A; (110kW)	1998	05.91-12.92		
1.8 D	RTE; RTF; RTH; (44kW)	1753	07.90-12.92	225219	
ESCORT VI					
1.3	J4B; J6A; (44kW)	1299	09.92-01.95	225201	
1.4	F6F; F6G; (52kW)	1391	09.92-01.95	225213	
1.4; 1.4i	F4B; FUH; (55kW)	1391	07.93-01.95		
1.4	F6F; F6G; FUH; (52kW-55kW)	1391-1392	12.92-01.95	225213	
1.6 16V XR3i; 1.6i 16V; 1.8 16V XR3i; 1.8 XR3i 16V; 1.8i 16V	L1E; L1H; L1K; RDA; RQB; (65kW-96kW)	1597-1796	09.92-01.95		
RS Cosworth	N5F; (162kW)	1994	09.92-01.95		
RS 2000	N7A; (110kW)	1998	09.92-01.95		
1.8 D	RTE; RTF; RTH; (44kW)	1753	09.92-01.95	225219	
1.8 TD	RFD; RFK; RFS; (66kW)	1753	02.93-01.95	225219	
ESCORT VII					
1.3	J4B; J6A; (44kW)	1299	01.95-02.99	225201	
1.4	F4B; FUH; (55kW)	1391	01.95-02.99	225213	
1.4	F4B; (55kW)	1391	02.95-08.98		
1.6 16V XR3i; 1.6i 16V	L1H; (65kW)	1597	01.95-12.96		
1.6 16V; 1.6 16V XR3i; 1.6i 16V	L1E; L1K; (66kW)	1597	01.95-09.99		
1.8 16V; 1.8 16V XR3i	RDA; RKC; (77kW-85kW)	1796	01.95-02.99		
1.8 16V XR3i	RQB; (96kW)	1796	02.95-08.00		
RS COSWORTH	N5F; (162kW)	1994	02.95-10.98		
RS 2000	N7A; (110kW)	1998	02.95-10.98		
1.8 D	RTE; RTF; RTH; (44kW)	1753	01.95-02.99	225219	
1.8 TD	RVA; (51kW)	1753	12.95-08.99		
1.8 TD	RFD; RFK; (66kW)	1753	01.95-02.99	225219	
ESCORT CLASSIC					
1.6 16V	L1E; (66kW)	1597	10.98-07.00		
1.8 TD	RFD; RFK; (66kW)	1753	10.98-07.00	225219	
ESCORT '81 EXPRESS (AVA)					
1.1	GLB; (37kW)	1117	03.81-02.86		
1.3	JPA; (51kW)	1296	03.81-02.86	225213	
1.6 D	LTA; (40kW)	1608	02.84-02.86		
ESCORT '86 EXPRESS (AVF)					
1.1	GSG; (37kW)	1117	05.86-07.90	225217	
1.3	JBB; JLA; JLB; (44kW)	1297	02.86-07.90	225201 225217	
1.3	JBA; (46kW)	1297	07.88-07.90	225201	
1.4i	F6B; F6D; FUC; (54kW)	1392	02.86-07.90	225213	
1.6 D	LTA; (40kW)	1608	02.86-07.90		
1.7 D	RTA; RTB; (44kW)	1753	07.88-07.90		
ESCORT '91 EXPRESS (AVL)					
1.3	JBD; (46kW)	1299	07.90-12.94	225201	
1.4	F6F; F6G; (52kW)	1391	07.90-12.94	225213	
1.8 D	RTH; (44kW)	1753	07.90-12.94	225219	
ESCORT '95 EXPRESS (AVL)					
1.4	F4B; (54kW)	1391	01.95-		
1.8 D	RTF; RTH; (44kW)	1753	01.95-	225219	
1.8 D	RVA; (51kW)	1753	12.95-06.01		
FIESTA I					
0.9	TKA; TKW; TLA; (29kW-33kW)	957	05.76-08.83		
1.1	GLA; GLW; (39kW-40kW)	1117	05.76-08.83		
1.3	J3E; (49kW)	1297	08.77-08.83		
FIESTA II					
1.0	TKB; (33kW)	957	09.83-02.89	225217	
1.1	GLC; GSF; GSH; (36kW-37kW)	1117	09.83-02.89	225217	
1.3	JPC; (51kW)	1296	09.83-01.87	225213	
1.3	J6B; (44kW)	1299	09.91-02.96	225201	

RUVILLE YOUR PARTNER

Ford

215210									1	295218(N)	
					8	265230			1	295250(N)	
215214					8	265230			1	295250(N)	
215201					8	265208					225201: J6A; 215201: J6A
215204											215204: J4B
215208									1	295218(N)	
215203									1	295218(N)	
					16	265205			1	295201(N)	
					16	265280					
215214					8	265230			1	295250(N)	
215201					8	265208					225201: J6A; 215201: J6A
215204											215204: J4B
215208									1	295218(N)	
									1	295218(N)	
215208									1	295218(N)	
					16	265205			1	295201(N)	
					16	265206					
					16	265280					
215214					8	265230			1	295250(N)	
215214					8	265230			1	295250(N)	225219: RFK; 215214: RFK; 295250(N): RFK
215201					8	265208					225201: J6A, →08.97; 215201: J6A, →08.97
215204											215204: J4B, →08.97
									1	295218(N)	
									1	295218(N)	
					16	265205			1	295201(N)	
					16	265205			1	295201(N)	265205:→05.98
					16	265205			1	295201(N)	
					16	265205					
					16	265206					
					16	265280					
215214					8	265230			1	295250(N)	
					8	265230			1	295250(N)	
215214					8	265230			1	295250(N)	225219: RFK; 215214: RFK; 295250(N): RFK
					16	265205			1	295201(N)	
215214					8	265230			1	295250(N)	225219: RFK; 215214: RFK; 295250(N): RFK
215202					8	265208					
215208									1	295218(N)	
					8	265230			1	295250(N)	
					8	265208					225217:→08.88
215201					8	265208					225201: JBB; 215201: JBB
											225217: JLA, JLB
215201					8	265208					
215208									1	295218(N)	225213: F6B, FUC; 215208: F6B, FUC; 295218(N): F6B, FUC
					8	265230			1	295250(N)	
					8	265230					
215201					8	265208					
215208									1	295218(N)	
215214					8	265230			1	295250(N)	
									1	295218(N)	
215214					8	265230			1	295250(N)	
					8	265230			1	295250(N)	
215202					8	265208					
215202					8	265208					
					8	265208					
					8	265208					
					8	265208					
215208									1	295218(N)	
215201					8	265208					

		cm³			
Ford					
FIESTA II					
1.4; 1.6 XR2	F6A; F6C; FUB; FUD; LUB; LUD; (52kW-71kW)	1392-1597	03.84-11.89	225213	
1.6 D	LTB; (40kW)	1608	04.84-02.89		
1.8 D	RTC; RTD; RTG; (43kW-44kW)	1753	03.89-02.96	225219	
1.8 D	RTK; (44kW)	1753	02.96-		
1.8 DI	RTN; RTP; (55kW)	1753	09.00-		
FIESTA III					
1.0; 1.1	G6A; TLB; (33kW-37kW)	1001-1119	03.89-12.95	225230	
1.1	GUD; GUE; (40kW)	1119	03.89-12.95	225230	
1.3	J6B; JBC; (44kW)	1299	03.89-01.97	225201	
1.4	F6E; FUG; FUJ; (52kW-54kW)	1391	03.89-12.95	225213	
1.6	LUH; (65kW)	1597	01.89-01.94	225213	
1.6i 16V	L1G; (65kW)	1597	01.94-12.95		
1.6 XR2i	LJD; (76kW)	1598	03.89-03.93	225203	
1.8 16V; 1.8 XR2i 16V	RDB; RQC; (77kW-96kW)	1796	02.92-12.95		
1.8 D	RTC; RTD; RTG; (44kW)	1753	03.89-12.95	225219	
1.8 D	RTJ; RTK; (44kW)	1753	05.98-		
D 1.8	RTN; RTP; RTQ; (55kW)	1753	03.00-		
FIESTA IV					
1.0i	(38kW-48kW)	999	02.97-01.02		
1.25i 16V	DHA; DHB; DHC; DHD; DHE; DHF; DHG; (55kW)	1242	08.95-01.02		
1.3i	JJA; JJC; JJE; JJJ; JJK; JJM; (37kW)	1299	08.95-01.02	225206	
1.3i	J4C; J4J; J4L; J4Q; J4R; J4T; (44kW)	1299	08.95-01.02		
1.4i 16V; 1.6 16V	FHA; FHE; L1T; L1V; (66kW-76kW)	1388-1596	04.96-01.02		
1.8 D	RTJ; RTK; (44kW)	1753	08.95-04.00		
FIESTA V					
1.3	A9JA; A9JB; BAJA; (44kW-51kW)	1299	11.01-		
1.4 TDCi	F6JA; F6JB; (50kW)	1399	11.01-	225908	
1.6 TDCi	HHJA; HHJB; (66kW)	1560	11.04-	225904	
FIESTA VAN					
1.4 TDCi	F6JA; F6JB; (50kW)	1399	10.03-	225908	
1.4 TDCi	(50kW)	1399	01.09-		
1.6 TDCi	(66kW)	1560	01.09-	225904	
FIESTA VI					
1.4 TDCi	F6JD; (50kW)	1399	01.09-		
1.6 TDCi	HHJD; (55kW-66kW)	1560	10.08-	225904	
FOCUS					
1.4; 1.4 16V	FXDA; FXDB; FXDC; FXDD; (55kW)	1388	10.98-11.04		
1.6 16V	FYDA; FYDB; FYDC; FYDD; FYDH; (74kW)	1596	10.98-11.04		
1.8 DI/TDDi; 1.8 TDCi; 1.8 TURBO DI/TDDi	BHDA; BHDB; C9DA; C9DB; C9DC; F9DA; F9DB; FFDA; (55kW-85kW)	1753	10.98-11.04		
FOCUS C-MAX					
1.6 TDCi	G8DA; G8DB; HHDA; HHDB; (66kW-80kW)	1560	10.03-03.07	225904	
1.8 TDCi	KKDA; (85kW)	1753	01.05-03.07		
FOCUS II					
1.6 TDCi	G8DA; G8DB; HHDA; HHDB; (66kW-80kW)	1560	11.04-	225904	
1.8 TDCi	KKDA; KKDB; (85kW)	1753	01.05-		
2.0 TDCi	G6DA; G6DB; G6DD; (100kW)	1997	04.05-		
FUSION					
1.4 TDCi	F6JA; F6JB; (50kW)	1399	08.02-	225908	
1.6 TDCi	HHJA; HHJB; (66kW)	1560	11.04-	225904	
GALAXY					
1.8 TDCi	FFWA; QYWA; (74kW-92kW)	1753	05.06-		
2.0 TDCi	AZWA; QXWA; QXWB; (96kW-103kW)	1997	05.06-		
2.2 TDCi	Q4BA; (129kW)	2179	03.08-		
GALAXY (WGR)					
2.0i	NSE; ZVSA; (85kW)	1998	11.95-05.06		
2.3 16V	E5SB; (103kW)	2295	09.01-05.06		

RUVILLE YOUR PARTNER

Ford

215208									1	295218(N)	
					8	265230			1	295250(N)	
215214					8	265230			1	295250(N)	
					8	265230			1	295250(N)	
					8	265230					
215230					8	265208					
215230					8	265208			1	295218(N)	295218(N): GUE
215201					8	265208					
215208									1	295218(N)	
215208									1	295218(N)	
					16	265205					
215203									1	295218(N)	
					16	265205					
215214					8	265230			1	295250(N)	
					8	265230			1	295250(N)	
					8	265230					
	8	235206			8	265281					
	8	235200 [6]									
					16	265203					265203:→01.01
215204					8	265208					225206:→08.97; 215204:→08.97; 265208:→09.97
215204					8	265208					215204:11.96→, →09.97; 265208:11.96→, →09.97
					16	265203					265203:→01.01
					8	265230			1	295250(N)	
	8	235206			8	265281					
	8	235200 [6]									
215915	8	235921			8	265165					
	8	235920									
215916	16	235207			16	268400					215916:(ELV)
215918											215918:(ALV)
215915	8	235921			8	265165					
	8	235920									
	8	235921			8	265165					
	8	235920 [6]									
215916	16	235207			16	268400					215916:(ELV)
215918											215918:(ALV)
	8	235921			8	265165					
	8	235920 [6]									
215916	16	235207			16	268400					215916:(ELV)
215918											215918:(ALV)
					16	265203			2	295202(N)	265203:→12.00
					16	265203			2	295202(N)	265203:→01.01
					8	265230					
215916	16	235207			16	268400					215916:(ELV)
215918											215918:(ALV)
					8	265230					
215916	16	235207			16	268400					215916:(ELV)
215918											215918:(ALV)
					8	265230					
	16	235906 [6]									235906:→03.07
215915	8	235921			8	265165					
	8	235920									
215916	16	235207			16	268400					215916:(ELV)
215918											215918:(ALV)
					8	265230					
	16	235906 [6]									235906:→06.08
	16	236600			16	266602					
					8	265280					
					16	265272					

6 siehe Klappseite vorn • see fold in front.

		cm³			
Ford					
GALAXY (WGR)					
2.3 16V	E5SA; Y5B; (107kW)	2295	01.97-05.06		
2.8i V6	AAA; AMY; (128kW)	2792	11.95-04.00		
2.8 V6	AYL; (150kW)	2792	04.00-05.06		
1.9 TDI	1Z; AHU; ANU; (66kW)	1896	03.95-05.06	225403	
1.9 TDI	AFN; AVG; (81kW)	1896	08.97-04.00	225403	
1.9 TDI	ASZ; AUY; (85kW-96kW)	1896	04.00-05.06		
1.9 TDI	BTB; (110kW)	1896	05.05-05.06		
GRANADA (GU,GNU)					
1.6	LCK; (55kW)	1593	07.81-08.85	225215	
2.0	NEK; NEP; (74kW-77kW)	1993	08.79-08.85	225221	
2.8; 2.8i	PRC; PRD; PYA; PYU; (97kW-110kW)	2792	08.77-08.85		
KA					
1.0i; 1.3i; 1.6	A9A; A9B; CDB; CDC; (38kW-70kW)	999-1599	07.97-11.08		
1.3i	JJB; (37kW)	1299	09.96-10.02	225206	
1.3i	BAA; J4D; J4K; J4M; J4N; J4P; J4S; (44kW)	1299	09.96-11.08	225206	
1.3 TDCi	(55kW)	1248	02.09-		
MONDEO I					
1.6i 16V	L1J; (65kW)	1597	07.94-08.96		
1.6i 16V	L1F; (66kW)	1597	02.93-08.96		
1.8i 16V	RKA; RKB; (82kW-85kW)	1796	02.93-08.96		
2.0i 16V	NGA; (97kW-100kW)	1988	01.93-08.96		
1.8 TD	RFM; RFN; (65kW-66kW)	1753	06.93-08.96	225219	
MONDEO II					
1.6i	L1J; (66kW)	1597	09.96-11.00		
1.6i	L1L; L1N; L1Q; (70kW)	1597	05.98-11.00		
1.8i	RKB; RKF; RKH; RKJ; RKK; (85kW)	1796	09.96-11.00		
2.0i	NGA; NGB; NGC; NGD; (96kW)	1988	09.96-11.00		
1.8 TD	RFN; (66kW)	1753	09.96-11.00	225219	
MONDEO III					
2.0 16V DI / TDDi; 2.0 TDCi	D5BA; D6BA; FMBA; HJBA; HJBB; HJBC; N7BA; SDBA; (66kW-96kW)	1998	11.00-08.07		
MONDEO IV					
1.8 TDCi	FFBA; (74kW)	1753	03.07-		
2.0 TDCi	KLBA; LPBA; (85kW)	1997	11.07-		
2.0 TDCi	AZBA; N7BB; QXBA; QXBB; (96kW-103kW)	1997	03.07-		
2.2 TDCi	Q4BA; (129kW)	2179	03.08-		
ORION I					
1.3; 1.6	JPA; LP1; LPA; (51kW-58kW)	1296-1597	07.83-03.86	225213	
1.6i	LR1; LRA; (77kW)	1597	07.83-03.86	225214	
1.6 D	LTA; (40kW)	1608	02.84-03.86		
ORION II					
1.3	JBB; JLA; JLB; (44kW)	1297	12.85-07.90	225201	
1.4	F6B; F6D; FUA; FUAA; FUC; (52kW-55kW)	1392	12.85-07.90	225213	
1.6	LUC; (66kW)	1597	12.85-07.90	225213	
1.6	L4B; (66kW)	1597	03.86-07.90	225214	
1.6	LJB; (75kW)	1597	08.89-07.90		
1.6i	LRB; (77kW)	1597	03.86-07.90	225214	
1.6 D	LTC; (40kW)	1608	12.85-01.89		
1.7 D	RTA; RTB; (44kW)	1753	01.89-07.90	225219	
ORION III					
1.3	J4B; J6A; (44kW)	1299	07.90-12.93	225201	
1.4	F6F; F6G; (52kW)	1391	07.90-12.93	225213	
1.6i 16V	L1E; L1K; (66kW)	1597	07.92-12.93		
1.6i 16V	LJF; (77kW)	1598	07.90-09.92	225203	
1.8i 16V	RDA; RQB; (77kW-96kW)	1796	01.92-12.93		
1.8 D; 1.8 TD	RFD; RFK; RTE; RTF; RTH; (44kW-66kW)	1753	11.90-12.93	225219	
P 100 I					
1.6	LCR; (54kW)	1598	04.82-09.87	225215	

RUVILLE YOUR PARTNER

Ford

					16	265272					265272: Y5B
					12	265426			1	295404(K)	295404(K):(GS)
									1	295406(K)	295406(K):(GS), (mG)
	24	235701			24	265103					235701:→01.05; 265103:→02.02
					24	265703					265703:03.02→, →01.05
215409					8	265401			1	295401(N)	225403: AHU, 1Z;215409: AHU, 1Z;265401: ANU, →08.05; 295401(N): ANU
					8	265403			1	295405(N)	265403: ANU, 08.05→; 295405(N): AHU, 1Z
					8	265426			1	295404(K)	265426: 1Z, AHU; 295404(K):(GS), 1Z, AHU
									1	295406(K)	295406(K):(GS), 1Z, AHU, (mG)
215409					8	265426			1	295405(N)	
									1	295404(K)	295404(K):(GS), AFN, →576000
									1	295406(K)	295406(K):(GS), AFN, →576000, (mG)
					8	265401			1	295401(N)	265401:→08.05
					8	265403					265403:08.05→
					8	265401					265401:→08.05
					8	265403					265403:08.05→
215212	8	235204							1	295225(N)	
215218	8	235204							1	295225(N)	
215224											
	8	235206			8	265281					
	8	235200 [6]									
215204					8	265208					225206:→08.97; 215204:→08.97; 265208:→09.97
215204					8	265208					225206:→11.96; 215204:→09.97; 265208:→11.96
	16	235809			16	265809					
					16	265205					
					16	265205			2	295201(N)	
					16	265205			1	295201(N)	
					16	265205			1	295201(N)	265205: NGA
215214					8	265230			1	295250(N)	
					16	265205			2	295201(N)	265205:→05.98
					16	265205					265205:→05.98
					16	265205			1	295201(N)	265205:→05.98; 295201(N): RKB
					16	265205			1	295201(N)	265205:→05.98; 295201(N): NGA
215214					8	265230			1	295250(N)	225219:→07.98; 215214:→07.98
	8	245230 [6]									245230:kA
	8	245231 [6]									245231:IA
					8	265230					
	16	235906 [6]									
	16	235906 [6]									235906:→10.07
	16	236600			16	266602					
215208									1	295218(N)	
215210									1	295218(N)	
					8	265230			1	295250(N)	
215201					8	265208					
215208									1	295218(N)	
215208									1	295218(N)	
215210									1	295218(N)	
									1	295218(N)	
215210									1	295218(N)	
					8	265230			1	295250(N)	
215214					8	265230			1	295250(N)	
215201					8	265208					225201: J6A; 215201: J6A
215204											215204: J4B
215208									1	295218(N)	
					16	265205			1	295201(N)	
215203									1	295218(N)	
					16	265205			1	295201(N)	
215214					8	265230			1	295250(N)	
215212	8	235204									

6 siehe Klappseite vorn • see fold in front.

		cm³			
Ford					
P 100 II					
2.0	NAE; (57kW)	1993	10.87-	225221	
1.8 TD	RFA; (55kW)	1753	10.87-12.92	225219	
PUMA (EC_)					
1.4 16V	FHD; FHF; (66kW)	1388	11.97-10.00		
1.6 16V	L1W; (76kW)	1596	08.00-		
RANGER					
2.5 TD	(62kW)	2500	04.02-		
SCORPIO I					
1.8; 2.0i	NRC; REC; (66kW-74kW)	1796-1993	04.85-02.92	225221	
2.0	N8D; NEL; (77kW)	1993	04.85-08.89	225221	
2.0i	N9D; N9F; NRA; NRI; (85kW-88kW)	1993-1998	04.85-09.94	225221	
2.8i	PRE; (110kW)	2792	04.85-11.86		
SCORPIO II					
2.0i	NSD; (85kW)	1998	10.94-08.98		
2.0i 16V; 2.3i 16V	N3A; Y5A; (100kW-108kW)	1998-2295	10.94-08.98		
SIERRA (C)					
1.3	JCT; (44kW)	1294	08.82-12.86	225215	
1.6	LCS; LCT; LSD; (55kW)	1593	08.82-12.86	225215	
1.8; 2.0; 2.0i	NET; NR2; NRB; NRD; REB; (66kW-85kW)	1796-1993	08.82-12.86	225221	
2.8 XR; 2.8 XR4i; 2.8i; 2.8i XR	PR5; PR6; PRT; (105kW-110kW)	2792	08.82-12.86		
SIERRA (G)					
1.6	LSE; (55kW)	1597	01.87-02.93	225215	
1.6; 1.6i	L6B; (59kW)	1597-1598	10.89-02.93	225214	
1.8	R2C; R6A; (64kW)	1769	05.88-02.93	225205	
1.8	RED; REF; (59kW)	1796	10.87-09.89	225221	
1.8	R2A; RED; (66kW)	1796	01.87-05.88	225205 225221	
2.0i	N4B; NE5; NEJ; (74kW)	1993	01.87-02.93	225221	
2.0	N8C; NES; (77kW)	1993	01.87-02.93	225221	
2.0i	N4A; N4I; (85kW)	1993	01.87-02.93	225221	
2.0 16V COSWORTH; 2.0 RS COSWORTH	N5B; N5C; N5D; (150kW-162kW)	1993	11.87-02.93		
2.0; 2.0 XR; 2.0 XR4i; 2.0i	N8A; N9C; (80kW-92kW)	1998	05.89-02.93		
2.8; 2.8i; 2.8i XR	PR7; PR8; PRG; (105kW-110kW)	2792	01.87-02.93		
1.8 TD	RFA; RFB; RFL; (55kW)	1753	08.88-02.93	225219	
S-MAX					
1.8 TDCi	QYWA; (92kW)	1753	05.06-		
2.0 TDCi	AZWA; QXWA; QXWB; (85kW-103kW)	1997	05.06-		
2.2 TDCi	Q4BA; (129kW)	2179	03.08-		
STREET KA					
1.6	CDRA; CDRB; (70kW)	1599	05.03-07.05		
TOURNEO CONNECT					
1.8 Di; 1.8 TDCi; 1.8 TURBO Di	BHPA; HCPA; HCPB; RWPA; (55kW-81kW)	1753	06.02-		
TRANSIT					
2.2 TDCi; 2.4 TDCi	H9FB; JXFA; P8FA; P8FB; PGFA; PHFA; PHFC; QVFA; QWFA; (63kW-103kW)	2198-2402	07.06-		
3.2 TDCi	SAFA; SAFB; (147kW)	3199	09.07-		
TRANSIT (V_)					
1.6	B; (48kW)	1593	11.77-10.86	225215	
TRANSIT (T_)					
1.6; 2.0	LAT; N6T; NAT; NAV; (46kW-57kW)	1593-1994	09.85-09.92	225215	
TRANSIT (E_)					
2.0; 2.0i	NBA; NCA; (66kW-72kW)	1993-1994	09.91-09.94	225221	
2.0	NSF; NSG; (84kW)	1998	06.94-03.00		
2.0 CNG	NSH; (84kW)	1998	06.94-03.00		
TRANSIT (FD_, FB_, FS_, FZ_, FC_, FA_, FM_, FN_)					
2.3; 2.3 16V	E5FA; E5FC; (105kW-107kW)	2295	08.00-05.06		
2.0 DI; 2.0 TDCi	ABFA; D3FA; F3FA; FIFA; (55kW-92kW)	1998	08.00-05.06		
2.4 DI; 2.4 TDCi	D2FA; D2FB; D2FE; D4FA; F4FA; H9FA; (55kW-101kW)	2402	01.00-05.06		

RUVILLE YOUR PARTNER

Ford

215218	8	235204							1	295225(N)	
215214					8	265230			1	295250(N)	
					16	265203			2	295202(N)	265203:01.98→, →05.98
					16	265203					265203:10.00→, →12.00
	12	235205			12	265285					
	12	235201 [6]									
215218	8	235204							1	295225(N)	
215218	8	235204			8	265280			1	295225(N)	225221: NEL;215218: NEL;235204: NEL;265280: N8D; 295225(N): NEL
									1	295244(N)	295244(N): N8B
215218	8	235204							1	295225(N)	
215224											
					8	265280					
					16	265272					
215212	8	235204									
215212	8	235204							1	295225(N)	225215: LCS, LCT; 215212: LCS, LCT; 235204: LCS, LCT
215218	8	235204							1	295225(N)	
215224											
215212	8	235204							1	295225(N)	
215210									1	295218(N)	
215205					8	265202			1	295225(N)	
215218	8	235204							1	295225(N)	
215205	8	235204			8	265202			1	295225(N)	225205: R2A;215205: R2A;235204: RED;265202: R2A; 295225(N): RED
215218											225221: RED; 215218: RED
215218	8	235204							1	295225(N)	
215218	8	235204			8	265280			1	295225(N)	225221: NES; 215218: NES; 235204: NES; 265280: N8C; 295225(N): NES
									1	295244(N)	295244(N): N8C
215218	8	235204							1	295225(N)	
					16	265206					
					8	265280			1	295244(N)	
215224											
215214					8	265230			1	295250(N)	
					8	265230					
	16	235906 [6]									235906:→06.08
	16	236600			16	266602					
	8	235206			8	265281					
	8	235200 [6]									
					8	265230					
	1	235208 [6]									
	1	235209 [6]									
215212	8	235204									
215212	8	235204							1	295225(N)	
215218	8	235204							1	295225(N)	
					8	265280			1	295244(N)	
					8	265280					
					16	265272					
	8	245230 [6]									245230:kA
	8	245231 [6]									245231:IA
	8	245232 [6]									245232:kA
	8	245233 [6]									245233:IA

6 siehe Klappseite vorn • see fold in front.

		cm³			
Ford					
TRANSIT CONNECT					
1.8 Di; 1.8 TDCi DPF	BHPA; RWPA; (55kW-81kW)	1753	06.02-		
TRANSIT TOURNEO					
2.2 TDCi	PGFA; QVFA; QWFA; (81kW-103kW)	2198	07.06-		
Ford USA					
EXPLORER (U2)					
4.0 V6	(115kW-121kW)	3958	01.93-		
4.0 V6	(150kW-152kW)	4011	05.98-		
4.9 V6	(157kW)	4942	01.96-		
Honda					
ACCORD IX					
2.2 i-DTEC	N22B1; (110kW)	2199	07.08-		
ACCORD VIII					
2.2 i-CTDi	N22A1; (103kW)	2204	01.04-		
CIVIC VII					
2.2 CTDi	N22A2; (103kW)	2204	01.06-		
CR-V II					
2.2 CTDi	N22A2; (103kW)	2204	02.05-09.06		
CR-V III					
2.2 i-CTDi	N22A2; (103kW)	2204	01.07-		
FR-V					
2.2 i CTDi	N22A1; (103kW)	2204	07.05-		
Hyundai					
ACCENT (LC)					
1.3	G4E-A; (55kW-63kW)	1341	01.00-		
1.5	G4EB; (66kW)	1495	01.00-		
1.5 CRDi	D3-EA; (60kW)	1493	01.02-		
ACCENT (MC)					
1.5 CRDi GLS	D4FA; (81kW)	1493	11.05-		
ACCENT (X-3)					
1.3; 1.3i 12V; 1.5i 12V	G4EH; G4EK; (44kW-65kW)	1341-1495	10.94-01.00		
ELANTRA (XD)					
CRDi	D4FB; (85kW)	1582	02.06-		
GALLOPER II					
2.5 D; 2.5 TCI	D4BH; (73kW-77kW)	2476	08.98-		
GETZ					
1.3	G4E-A; (60kW-63kW)	1341	09.02-		
1.5 CRDi	D3-EA; (60kW)	1493	03.03-		
1.5 CRDi	(65kW)	1493	08.05-		
H-1					
2.5 D; 2.5 TD	D4BF; D4BH; (59kW-74kW)	2476	10.97-		
2.5 CRDi	(81kW)	2497	01.07-		
2.5 CRDi	D4CB; (103kW)	2497	08.03-		
2.5 CRDi	D4CB; (125kW)	2497	02.08-		
H100					
2.5 D	D4BB; (57kW)	2477	12.94-03.00		
I10					
1.2	(57kW)	1248	11.08-		
1.1 CRDi	D3FA; (55kW)	1120	01.08-		
I20					
1.2	(57kW)	1248	09.08-		
I30					
1.6 CRDi	D4FB; (85kW)	1582	10.07-		
IX55					
3.0 V6 CRDi	(176kW)	2959	09.08-		
LANTRA II (J-2)					
1.5 12V	G4EK; (65kW)	1495	12.96-		
MATRIX (FC)					
1.5 CRDi; 1.5 CRDi VGT	D4FA; (75kW-81kW)	1493	12.04-		
1.5 CRDi	D3-EA; (60kW)	1496	10.01-		

RUVILLE YOUR PARTNER

Ford → Hyundai

					8	265230					
	1	235208 [6]									

	12	235205			12	265255					235205:08.96→; 265255:→07.96
	12	235201 [6]			12	265285					235201:08.96→; 265285:08.96→
	12	235205			12	265285					
	12	235201 [6]									
					12	265285					265285:08.96→

	16	237401			16	267400					
	16	237400			16	267400					
	16	237400			16	267400					
	16	237400			16	267400					
	16	237400			16	267400					
	16	237400			16	267400					

216200											216200:→12.06
216200											
216202					12	266552					216202:→03.06
	16	238401			16	266552					
216200											216200:→09.99
	16	238401			16	266552					
216201											216201:05.00→, →06.02
216200											216200:→08.05
216202					12	266552					216202:→08.05
	16	238401			16	266552					
216201											
	8	238400			16	266552					238400:IA; 266552:04.09→
	8	238404			16	268400					238404:01.10→, kA; 268400:→04.09
	8	238400			16	266552					238400:→12.06, IA; 266552:→12.06
	8	238400			16	266552					238400:IA; 266552:04.09→
	8	238404			16	268400					238404:01.10→, kA; 268400:→04.09
216201											216201:05.99→
	16	238402			16	265165					
	12	238401			12	266552					
	16	238402			16	265165					
	16	238401			16	266552					
	24	238403			24	266552					
216200											216200:→07.00
	16	238401			16	266552					
216202					12	266552					216202:→05.05

6 siehe Klappseite vorn • see fold in front.

		cm³			

Hyundai

S (SLC)					
1.5i	G4EK; (65kW)	1495	04.92-05.96		
STAREX (H1)					
2.5 TD	D4BF; (59kW)	2476	06.97-		
TERRACAN (HP)					
2.5 TD	D4BH; (74kW)	2476	12.01-		

Jaguar

S-TYPE (CCX)					
2.7 L	(152kW)	2720	06.04-		
XF					
2.7 D	(152kW)	2720	03.08-		
XJ					
6 2,7 D	(152kW)	2720	10.05-		
XJ (X300)					
6 3.2; 6 4.0 Sovereign; R 4.0 Super Charged	9JPFRB; 9JPGRB; 9KPDRB; (155kW-235kW)	3239-3980	11.94-07.97		
XJ (XJ 40,81)					
6 3.6	9DPANA; AJ6; (136kW-156kW)	3590	10.86-08.89		
XJS					
3.6	AJ6; (156kW-162kW)	3590	10.83-12.89		
4.0	9EPCNA; 9LPFRB; (163kW-171kW)	3980	05.91-03.96		
XJSC					
3.6	AJ6; (136kW-162kW)	3590	10.86-05.91		

Jeep

CHEROKEE (KK)					
2.8 CRD	(130kW)	2777	05.08-		
COMMANDER					
3.0 CRD	(160kW)	2987	04.06-		
GRAND CHEROKEE II (WJ)					
2.7 CRD; 2.7 CRD Laredo	(120kW)	2685-2688	10.01-		
GRAND CHEROKEE III (WK)					
3.0 CRD	(160kW)	2987	06.05-		
WRANGLER III (JK)					
2.8 CRD	(130kW)	2777	04.07-		

Kia

CARENS I					
1.8	(81kW)	1793	11.00-07.02		
CARENS II					
1.6; 1.8	(77kW-93kW)	1594-1793	07.02-		
CARNIVAL					
2.5 V6	(121kW)	2497	08.99-10.01		
2.9 TD	(93kW)	2903	08.99-10.01		
CARNIVAL II					
2.5 V6	(110kW)	2497	10.01-		
2.9 CRDi	(106kW)	2902	10.01-		
CEE'D					
1.6 CRDi 115; 1.6 CRDi 90	D4FB; D4FB-L; (66kW-85kW)	1582	12.06-		
CERATO					
1.5 CRDi; 1.6 CRDi	D4FA; D4FB; (75kW-85kW)	1493-1582	06.05-		
CLARUS					
1.8i 16V	T8; (85kW)	1793	07.96-		
PICANTO					
1.1 D	D3FA; (55kW)	1120	11.05-		
PRO CEE'D					
1.6 CRDi 115; 1.6 CRDi 90	D4FB; D4FB-L; (66kW-85kW)	1582	02.08-		
RIO					
1.5	(71kW-72kW)	1493	08.00-02.05		
RIO II					
1.5; 1.5 CRDi	D4FA; (81kW)	1493	03.05-		
SEPHIA					
1.8i 16V	OK24N; OK26Y; (82kW)	1793	01.95-		

RUVILLE YOUR PARTNER

Hyundai → Kia

216200											216200:04.94→, →03.95
216201											216201:05.99→, →07.01
216201											216201:→12.03

	24	235202			24	265165					
	24	235908 [6]									
	24	235202			24	265165					
	24	235908 [6]									
	24	235202			24	265165					
	24	235908 [6]									
					24	268300					
					12	268300					
					12	268300					
					24	268300					
					12	268300					

	16	238604 [6]									
	24	235118			24	265165					
					20	265140					
	24	235118			24	265165					
	16	238604 [6]									

					16	267005					
					16	267005					
					24	268902					
					16	268901					
					24	268902					
					16	268901					
	16	238401			16	266552					
	16	238401			16	266552					
					16	267005					
	12	238401			12	266552					
	16	238401			16	266552					
					16	267005					
	16	238401			16	266552					
					16	267005					

6 siehe Klappseite vorn • see fold in front.

		cm³			
Kia					
SHUMA					
1.5i 16V; 1.8i 16V	(65kW-81kW)	1498-1793	10.97-10.01		
SHUMA II					
1.6; 1.8	(75kW-84kW)	1594-1793	05.01-08.04		
SORENTO (JC)					
2.5 CRDi	D4CB; (103kW)	2497	08.02-		
2.5 CRDi	D4CB; (125kW)	2497	12.06-		
SOUL					
1.6 CRDi	(93kW)	1582	02.09-		
VENGA					
1.4 CRDi; 1.6 CRDi	(66kW-94kW)	1396-1582	02.10-		
Lada					
110/111/112					
1.5 16V (110); 1.5 16V (111); 1.5 16V (112)	(67kW)	1499	10.00-		
1.5 16V (110); 1.5 16V (111); 1.5 16V (112)	VAZ-2112; (70kW)	1499	01.95-		
2.0i (110)	C20XE; (110kW)	1998	08.96-		
NIVA (2121)					
1900 D	XUD9A; (47kW)	1905	01.93-	225902 225910	
SAMARA (2108, 2109)					
1300	BA32108; (45kW-48kW)	1288	01.86-		
SAMARA FORMA (21099)					
1300	BA32108; (45kW)	1288	07.91-		
1300	(46kW)	1288	05.90-		
1300	BA32108; (48kW-50kW)	1288	05.89-		
Lancia					
BETA H.P.E. (828 BF)					
1600	828B.000; (74kW)	1585	08.80-09.84		
2000	828B1.000; (85kW-88kW)	1995	05.76-09.84		
2000 i.e.	828B4.000; (90kW)	1995	05.81-09.84		
2000 Volumex	(99kW)	1995	07.83-09.84		
BETA (828_B_)					
1300	(61kW)	1297	04.76-07.82		
1400; 1600	828A2.000; 828B.000; (66kW-74kW)	1438-1585	08.73-07.82		
2000	828B1.000; (85kW-88kW)	1995	04.76-07.82		
BETA (828BC)					
1300; 1600	828B.000; 828D3.000; (62kW-74kW)	1367-1585	04.76-12.84		
2000; 2000 i.e.	(85kW-90kW)	1991	01.81-12.84		
2000 VX	(99kW)	1991	07.83-12.84		
2000	828B1.000; (88kW)	1995	04.76-12.84		
BETA (828BS)					
1600	828B.000; (74kW)	1585	05.76-08.82		
2000	828B1.000; (85kW-88kW)	1995	05.76-10.86		
DEDRA (835)					
1.6; 1.6 i.e.; 1.6 LE	159B9.000; 835A1.000; 835A1.046; 835C1.000; (55kW-66kW)	1581	08.89-07.99		
1.6 16V; 1.8 GT; 1.8 GT 16V; 1.8 LE	182A2.000; 182A4.000; 183A1.000; (76kW-96kW)	1581-1747	01.96-07.99		
1.8; 1.8 i.e.; 1.8 i.e./LE; 2.0 i.e.	835A2.000; 835A2.046; 835A5.000; 835A5.046; 835C5.000; 836A5.000; (66kW-86kW)	1756-1995	09.89-07.99		
2.0; 2.0 16V	836A3.000; (102kW)	1995	07.94-07.99		
2.0 HF Integrale; 2.0 i.e. TURBO Integrale; 2.0 i.e.TURBO; 2.0 TURBO	835A7.000; 835A7.046; 835A8.000; 835A8.046; (119kW-130kW)	1995	05.90-07.99		
1.9 TDS	160D1.000; 835A4.000; 835A4.046; (66kW)	1929	04.89-07.99		
DELTA (831ABO)					
1.3	831A2.000; 831B.000; (55kW-58kW)	1301	09.79-08.92		
1.5	831A1.000; 831B1.000; (63kW)	1498	09.79-12.92		
1.6 GT; 1.6 GT i.e.; 1.6 HF; 1.6 HF TURBO; 2.0 HF; 2.0 HF INTEGRALE	149C2.000; 831A4.000; 831A7.000; 831B3.000; 831B5.000; 831B7.000; 831B7.046; 831C5.000; 831C5.046; (66kW-133kW)	1585-1995	11.82-12.92		
2.0 HF INTEGRALE 16V; 2.0 HF INTEGRALE 16V Evo.	831D5.000; 831E5.000; 831E5.046; (144kW-155kW)	1995	03.89-01.94		
1.9 TDS	831D1.000; (59kW)	1929	10.86-12.89		
DELTA II (836)					
1.4	160A1.046; 836A4.000; (51kW)	1372	10.94-08.99		
1.6 i.e.	835C1.000; (55kW)	1581	06.93-08.99		
1.6	182A4.000; 182A6.000; (66kW-76kW)	1581	01.96-08.99		
1.7; 1.8 GT	182A2.000; 183A1.000; (83kW-96kW)	1747	03.96-08.99		

RUVILLE YOUR PARTNER

Kia → Lancia

					16	267005					
					16	267005					
	8	238400			16	266552					238400:IA; 266552:→01.05
					16	268400					268400:01.05→
	8	238400			16	268400					238400:IA
	16	238401			16	266552					
	16	238401			16	268400					

					8	267200					267200: VAZ-2112
					8	267200					
215333					16	265302			2	295310(N)	215333:(ELV); 265302: →14137011
215334					16	265312					215334:(ALV); 265312: 14137012→
215910									1	295912(N)	215910:VP
215913											225910:VP
217202											
217202											
217202											217202: BA32108
217202											

					8	265802					
					8	265802					265802:(-A/C)
					8	265802					
					8	265802					265802: 828BCI, 828B7.000, 08.83→
					8	265802					265802: 828CB3
					8	265802					
					8	265802					265802:(-A/C)
					8	265802					
					8	265802					265802: 828B4.000, 828BCI
					8	265802					265802: 828B7.000, 828BCI
					8	265802					265802:(-A/C)
					8	265802					
					8	265802					265802:(-A/C)
					8	265802					
					16	265801					
					8	265802					
					16	265802					
					8	265802					
					8	265802					
					8	265802					265802: 831B.000
					8	265802					265802: 831A1.000
					8	265802					
					16	265802					
					8	265802					
					8	265802					265802: 160A1.046
					8	265802					
					16	265801					265801: →0215502
					16	265805					265805: 0215503→
					16	265801					

		cm³			
DELTA II (836)					
1.8	835C4.000; 836A6.000; 836C4.000; (66kW)	1756	07.94-08.99		
1.8 i.e.	835C2.000; (76kW)	1756	06.93-08.99		
2.0 16V; 2.0 HPE; 2.0 TURBO	175A4.000; 836A2.000; 836A3.000; (102kW-142kW)	1995	06.93-08.99		
1.9 TD	160D1.000; 835A4.000; (66kW)	1929	10.94-08.99		
DELTA III					
1.4	198A1.000; 198A4.000; (88kW-110kW)	1368	09.08-		
1.8 Di	(147kW)	1759	01.09-		
1.6 MULTIJET; 1.9 MULTIJET; 2.0 MULTIJET	198A2.000; 198A5.000; 844A1.000; (88kW-140kW)	1598-1956	09.08-		
KAPPA (838)					
2.0 16V TURBO	838A4.000; (151kW)	1995	02.95-10.01		
2.0; 2.0 20V; 2.0 20V TURBO; 2.4 20V	175A3.000; 838A1.000; 838A2.000; 838A2.027; 838A6.000; (107kW-162kW)	1998-2446	08.94-10.01		
3.0 24V	838B.000; (150kW)	2959	08.94-10.01		
2.4 JTD; 2.4 TD	838A3.000; 838A7.000; 838A8.000; (91kW-100kW)	2387	08.94-10.01		
LYBRA (839)					
1.6 16V	182A4.000; (76kW)	1581	07.99-		
1.6	182B6.000; (76kW)	1596	10.00-10.05		
1.8 16V	839A4.000; 839A7.000; 839A9.000; (96kW)	1747	07.99-		
2.0; 2.0 20V	182B7.000; 185A8.000; (110kW-113kW)	1998	07.99-		
1.9 JTD	AR32302; (77kW)	1910	07.99-09.00		
1.9 JTD	937A2.000; AR37101; (81kW-85kW)	1910	09.00-		
2.4 JTD	839A5.000; 839A6.000; 841C.000; AR32501; (99kW-110kW)	2387	07.99-		
MONTE CARLO					
2.0	134AS.000; (88kW)	1995	09.75-05.81		
MUSA					
1.4	843A1.000; (70kW)	1368	10.04-		
1.3 Multijet	188A9.000; 199A3.000; (51kW-66kW)	1248	10.04-	225801	
1.6 D Multijet	350A2.000; (88kW)	1598	07.08-		
1.9 Multijet	188B2.000; (74kW)	1910	10.04-		
PHEDRA					
2.0	RFN; (100kW)	1997	09.02-		
3.0 V6	ES9J4S; (150kW)	2946	09.02-		
2.0 JTD	RHM; RHW; (79kW-80kW)	1997	09.02-		
2.0 JTD	RHK; (88kW)	1997	06.06-		
2.0 D Multijet; 2.2 JTD	4HW; RHR; (94kW-100kW)	1997-2179	09.02-		
PRISMA (831AB0)					
1.3; 1.5; 1.6; 1.6 i.e.; 1.6 i.e. SUPER; 2.0	138C2.048; 149C2.000; 831A1.000; 831A4.000; 831B1.000; 831B1.048; 831B4.000; 831B6.000; 831B7.000; (55kW-85kW)	1301-1995	01.83-02.92		
1.9 D; 1.9 TD	831D.000; 831D1.000; (48kW-59kW)	1911-1928	01.83-02.92		
THEMA (834)					
2000 i.e; 2000 i.e.	834B.048; 834B.146; 834B1.000; (83kW-86kW)	1995	03.86-05.92		
2000 i.e.	834B.000; (88kW)	1995	11.84-09.88		
2000 i.e. 16V	834B2.000; 834B2.246; (104kW-108kW)	1995	05.88-08.92		
2000 i.e. TURBO; 2000 TURBO 16V	834C.146; (110kW)	1995	07.86-03.92		
2000 16V	834F1.000; (112kW)	1995	05.92-07.94		
2000 i.e. TURBO	834C.000; (122kW)	1995	11.84-12.87		
2000 16V TURBO; 2000 i.e. 16V TURBO; 2000 TURBO 16V	834C1.000; 834C1.246; 834F2.000; (130kW-148kW)	1995	12.88-07.94		
THESIS					
2.0 TURBO; 2.4	841D.000; 841E.000; (125kW-136kW)	1998-2446	07.02-		
3.0 V6; 3.2 V6	841A.000; 841L.000; (158kW-169kW)	2959-3179	07.02-		
2.4 JTD	841C.000; (110kW)	2387	07.02-		
2.4 JTD	841G.000; (129kW)	2387	05.03-		
2.4 Multijet	841P.000; (136kW)	2387	04.06-		
TREVI					
1600; 2000 i.e.; 2000 Volumex	828B.000; 828B4.000; 828B7.000; (74kW-99kW)	1585-1995	05.80-01.87		
Y (840A)					
1.1	176B2.000; (40kW)	1108	11.95-09.03		
1.2	188A4.000; 840A3.000; (44kW)	1242	03.96-09.03		
1.2 16V	188A5.000; (59kW)	1242	10.00-09.03		
1.2 16V	176B9.000; (63kW)	1242	04.97-09.03		
Y10 (156)					
1.0 Fire	156A2.000; 156A2.100; 156A2.246; (32kW-37kW)	999	03.85-02.92		
1.0	156A.000; (41kW)	1049	03.85-07.89		
1.0 TURBO	156A1.000; (62kW)	1049	03.85-02.89		
1.1 Fire; 1.1 i.e. Fire	156C.046; (37kW)	1108	07.89-12.95		

RUVILLE YOUR PARTNER

Lancia

					8	265802					265802: 835C4.000
					8	265802					
					16	265802					
					8	265802					
					16	265812					
	16	235801			16	265809					235801: 939B1.000; 265809: 939B1.000
	16	235302			16	265809					
					16	265802					
					20	265801					265801: →0215502
					20	265805					265805: 0215503→
					24	266005					
					10	265802					
					16	265805					
					16	265801					
					16	265805					265805: 839A4.000
					20	265805					
215804					8	265802					
216000					8	265802					
					10	265802					
					8	265802					265802: 137AS/BS/T
					16	265807					265807: →984713
					16	265812					265812: 984714→
215805	16	235809			16	265809					215805:(ALV)
215807											215807:(ELV)
	16	235302			16	265809					
216000					8	265802					
					16	265903					
					24	265905					
	16	235906 [6]									
	16	235906 [6]									235906:VET.11075→
	16	235906 [6]									
					8	265802					
					8	265802					
					8	265802					
					8	265802					265802:(A.T.), →609204
											265802:(M.T.)
					16	265802					
					8	265802					
					16	265802					
					8	265802					265802:(A.T.), →609204
											265802:(M.T.)
					16	265802					
					16	265805					
					24	266005					
					10	265802					
	20	235807			20	265809					235807: 4654872→; 265809: 4654872→
	20	235302			20	265809					
					8	265802					
215811					8	265898			1	295801(N)	
					8	265898					265898: 840A3.000
215808					16	265807					215808:(ELV)
					16	265807					
					8	265898					
					8	265898					
					8	265802					
					8	265898					

6 siehe Klappseite vorn • see fold in front.

Lancia

		cm³			
Y10 (156)					
1.1 Avenue	176B2.000; (40kW)	1108	01.95-12.95		
1.1 i.e	156C.000; (42kW)	1108	08.89-06.92		
1.3 i.e. Fire	146A5.046; 156B.000; (53kW-56kW)	1297-1301	11.87-12.95		
YPSILON					
1.2	188A4.000; (44kW)	1242	10.03-		
1.2	188A5.000; (59kW)	1242	10.03-		
1.4	843A1.000; (70kW)	1368	10.03-		
1.3 JTD; 1.3 Multijet	188A9.000; 199A2.000; 199A3.000; (51kW-66kW)	1248	10.03-	225801	
1.3 Multijet	(77kW)	1248	05.07-		
ZETA (220)					
2.0 16V	RFN; (100kW)	1997	07.00-09.02		
2.0 16V	RFV; (97kW)	1998	05.98-07.00		
2.0 TURBO	RGX; (108kW)	1998	05.95-09.02		
2.0 JTD	RHW; (80kW)	1997	09.99-09.02		
2.0 JTD	RHZ; (80kW)	1997	04.00-09.02		
2.1 TD	P8C; (80kW)	2088	05.96-09.99		

Land Rover

DEFENDER					
2.4 Td4	(90kW)	2402	05.07-		
2.5 Td5; 2.5 Tdi	(90kW)	2495	06.98-		
DISCOVERY I					
3.5; 3.9 V8	22D; 35D; 36D; (113kW-134kW)	3531-3947	10.89-10.98		
DISCOVERY II					
3.9 V8	35D; 36D; (134kW-136kW)	3947-3950	06.94-		
2.5 TDI	(102kW)	2495	01.99-		
DISCOVERY III					
2.7 TD	(140kW)	2720	07.04-		
FREELANDER					
2.0 Td4	(80kW-82kW)	1951	11.00-		
FREELANDER 2					
2.2; 2.2 TD4	(112kW-118kW)	2179	10.06-		
RANGE ROVER II					
3.9; 4.0; 4.6	42D; 46D; (136kW-165kW)	3947-4554	07.94-03.02		
RANGE ROVER III					
3.0 Td 6	(130kW)	2926	03.02-		
RANGE ROVER SPORT					
2.7 TDVM	(140kW)	2720	02.05-		

Lexus

IS					
250	4GR-FSE; (153kW)	2499	10.05-		
IS C					
250	4GR-FSE; (153kW)	2499	10.05-		
LS					
4.0; 400	1UZ-FE; (203kW-209kW)	3969	09.97-		
430	3UZ-FE; (207kW)	4293	10.00-		

Mazda

2					
1.4 MZR	(50kW)	1399	01.08-		
1.6 MZ-CD	(66kW)	1560	10.08-		
3					
1.6 MZR-CD	(80kW)	1560	06.09-		
323 III (BF,BW)					
1.3; 1.5; 1.5i; 1.6; 1.6 GT	B5; B50; B53; B6; B65M; B68; B6E; E3; E5; E5E3; (44kW-77kW)	1296-1598	08.85-10.95		

RUVILLE YOUR PARTNER

Lancia → Mazda

215811					8	265898			1	295801(N)	
					8	265898					
					8	265802					
					8	265898					
215808					16	265807					215808:(ELV); 265807: →985541
215809					16	265812					215809:(ALV), →09.04; 265812: 985542→
					16	265807					265807: →984713
					16	265812					265812: 984714→
215805	16	235809			16	265809					215805:(ALV)
215807											215807:(ELV)
	16	235809			16	265809					
					16	265903					
					16	265901					
					8	265970			1	295907(N)	295907(N):(ST)
	16	235906 [6]									
	8	235901			8	265165					
	8	235900 [6]									
					12	265907					

	1	235208 [6]									
	10	238000			10	265103					
	10	238001 [6]									
					16	266140					
					16	266140					
	10	238000			10	265103					
	10	238001 [6]									
	24	235202			24	265165					
	24	235908 [6]									
	16	235003			16	265002					
	16	235000 [6]									
	16	236600			16	266602					
					16	266140					
	24	235003			24	265002					
	24	235000 [6]									
	24	235202			24	265165					
	24	235908 [6]									

	24	236900			24	266909					
	24	236900			24	266909					
					32	269600					269600:10.98→, →08.00
					32	269600					

	16	235921			16	265165					
	16	235920 [6]									
	16	235207			16	268400					
	16	235207			16	268400					
					8	267000					

6 siehe Klappseite vorn • see fold in front.

Mazda

		cm³			
626 III (GD,GV)					
1.8; 2.0; 2.0 12V	F8; FE; (65kW-79kW)	1789-1998	09.87-09.97		
2.0 16V; 2.0i	FEKAT.; (103kW-110kW)	1998	01.88-09.97		
2.2 12V	F2; F2L1; (85kW)	2184	11.87-11.96		
626 IV (GE,GV)					
1.8; 1.8i; 2.0i	FP; FS; (66kW-85kW)	1840-1991	08.91-04.97		
929 III (HC)					
2.2	F2; F21; F2E; (85kW)	2184	01.88-04.89		
3.0	JE; JE3; (125kW-140kW)	2954	06.87-06.91		
MPV I (LV)					
3.0i V6	JE94; (109kW-113kW)	2954	03.95-09.99		
MX-3 (EC)					
1.6i	B69; (65kW)	1598	07.91-		
MX-6					
2.0	FS; (85kW)	1991	02.92-		
XEDOS 9 (TA)					
2.5 V6	KL; (123kW)	2497	07.93-07.00		

Mercedes-Benz

190 - 230 (W110) HECKFLOSSE					
190 DC; 200 D	OM621.912; OM621.918; (40kW)	1971-1990	06.61-02.68		
190 (W201)					
190 E 1.8	M102.910; (80kW)	1797	04.90-08.93	225103	
190 2.0	M102.921; (66kW)	1996	10.82-10.84	225168	
190 2.0	M102.924; (75kW-77kW)	1996	09.84-05.90	225103	
190 E 2.0	M102.961; M102.962; (83kW)	1996	02.85-12.86	225103 225104	
190 E 2.0	M102.962; (85kW-87kW)	1996	01.85-08.93	225103	
190 E 2.0	M102.961; M102.962; (90kW)	1996	10.82-06.93	225103 225104	
190 E 2.3	M102.985; (97kW-100kW)	2298	09.86-08.93	225103	
190 E 2.3-16	M102.983; (125kW-136kW)	2298	04.84-08.88		
2.3; 2.3 E	M102.985; (97kW-100kW)	2299	10.82-09.88	225103	
190 E 2.5-16	M102.990; M102.991; (143kW-150kW)	2498	09.88-08.93		
190 E 2.6; 2.6	M103.942; (118kW-122kW)	2597-2599	10.82-08.93	225110	
190 D 2.0	OM601.911; (53kW-55kW)	1997	08.83-08.93	225113	
190 D 2.5; 190 D 2.5 TURBO	OM602.911; OM602.961; (66kW-93kW)	2497	04.85-08.93	225111	
200 - 280 E (W114, W115)					
200; 220	M115.920; M115.923; M115.926; (63kW-77kW)	1988-2200	01.68-01.77	225125	
280; 280 C	M110.921; (118kW)	2746	06.72-02.77	225180	
200 D; 220 D; 240 D	OM615.912; OM615.913; OM616.916; (40kW-48kW)	1988-2404	01.68-01.77		
240 D 3.0	OM617.910; (59kW)	3005	08.74-11.76		
200 - 300 (C/S/W123)					
200	M115.938; M115.939; (62kW-69kW)	1988	02.76-08.80	225125	
200; 200 T; 230 CE; 230 E; 230 TE	M102.920; M102.939; M102.980; (74kW-100kW)	1996-2299	04.80-12.85	225104	
280; 280 C; 280 CE; 280 E; 280 TE	M110.923; M110.984; M110.988; (115kW-136kW)	2746	02.76-11.85	225180	
200 D	OM615.940; (40kW-44kW)	1988	07.76-11.85		
220 D	OM615.941; (44kW-49kW)	2197	01.76-03.79		
240 D; 240 T D	OM616.912; (48kW-53kW)	2399	02.76-12.85		
300 D; 300 T D	OM617.912; (59kW-65kW)	2998	02.76-11.85		
300 CD TURBO D; 300 T D TURBO; 300 TURBO D	OM617.952; (92kW)	2998	10.80-11.85		
200 - 320 (A/C/S/W124)					
200; 200 E; 200 T; 200 TE	M102.922; M102.962; M102.963; (75kW-90kW)	1996-1997	09.85-05.93	225103	
200 E; 200 TE	M111.940; (100kW)	1998	10.92-06.93		
220 CE; 220 E; 220 TE	M111.960; (110kW)	2199	10.92-06.93		
230 CE; 230 E; 230 TE	M102.982; (97kW-100kW)	2298	12.84-06.93	225103	
260 E; 260 TE	M103.940; M103.943; (118kW-122kW)	2597	09.85-08.92	225110	
280 E; 280 TE	M104.942; (145kW)	2799	10.92-06.93		
300 CE; 300 E; 300 TE	M103.980; M103.983; M103.985; (132kW-138kW)	2960	01.85-06.93	225110	

RUVILLE YOUR PARTNER

Mazda → Mercedes-Benz

					12	267000					
					16	267002					
					12	267000					
					16	267001					267001: FP, GE, 412375-600000, (INA)
					12	267000					
					18	267000					267000:→06.89
					18	267000					
					16	267000					267000:→10.93
					16	267001					267001: FP, GE, 412375-600000, (INA)
					12	267002					267002:(ELV), →105759

215104	8	245103	2	255108							
215109	8	245104			8	265113					
215168	8	245106									
215109	8	245104			8	265113					
215108	8	245104			8	265113					225103: M102.962;215108: M102.961;245104: M102.962
215109	8	245106									225104: M102.961;215109: M102.962;245106: M102.961
215109	8	245104			8	265113					225103: M102.962;215109: M102.962;245104: M102.962
215108	8	245104			8	265113					225103: M102.962;215108: M102.961;245104: M102.962
215109	8	245106									225104: M102.961;215109: M102.962;245106: M102.961
215109	8	245104			8	265113					
					16	265115					
215109	8	245104			8	265113					
					16	265115					
215110	12	245108			12	265113					
215113					8	265118					
215111					10	265118					
215171											
215180	12	235110									215180:(ELV)
215181											215181:(ALV)
215104	8	245103	2	255108							
	10	245103	1	255108							
215171											
215108	8	245106									
215180	12	235110									215180:(ELV)
215181											215181:(ALV)
215104	8	245103	2	255108							215104:G.T.:10/50,20/60, →142197; 245103:G.T.:10/50,20/60, →142197
											215104:G.T.:12/52,22/62, →004748; 245103:G.T.:12/52,22/62, →004748
215104	8	245103	2	255108							
215104	8	245103	2	255108							215104:G.T.:10/50,20/60, →063573; 245103:G.T.:10/50,20/60, →063573
											215104:G.T.:12/52,22/62, →021689; 245103:G.T.:12/52,22/62, →021689
	10	245103	1	255108							
215103	10	245103	1	255108							
215109	8	245104			8	265113					
215160					16	265150					215160:(ELV)
215161											215161:(ALV)
215161					16	265150					215161:(ALV)
215162											215162:(ELV)
215109	8	245104			8	265113					
215110	12	245108			12	265113					
215101					24	265150					215101:(ELV)
215102											215102:(ALV)
215110	12	245108			12	265113					

		cm³			

Mercedes-Benz

200 - 320 (A/C/S/W124)					
300 CE-24; 300 E-24; 300 TE-24	M104.980; (162kW)	2960	09.88-06.93		
320 CE; 320 E; E 320 T	M104.992; (162kW)	3199	10.92-06.93		
400 E 4.2; 500 E	M119.974; M119.975; (205kW-240kW)	4196-4973	01.91-06.93		
200 D; 200 T D	OM601.912; (53kW-55kW)	1997	12.84-06.93	225113	
250 D; 250 T D; 250 TD Turbo (124.128); 250 TURBO D	OM602.912; OM602.962; (66kW-93kW)	2497	04.85-07.93	225111	
300 D; 300 T D; 300 T TURBO D; 300 TURBO D	OM603.912; OM603.913; OM603.960; OM603.963; (80kW-108kW)	2996	12.84-06.93	225112	
220 - 280 SE (W111)					
280 SE 3.5	M116.980; (147kW)	3500	01.69-12.71		
A-KLASSE/CLASS (W168)					
A 140; A 160; A 190; A 210	M166.940; M166.960; M166.990; M166.995; (60kW-103kW)	1397-2084	07.97-08.04		
A 160 CDI; A 170 CDI	OM668.940; OM668.941; OM668.942; (44kW-70kW)	1689	07.98-08.04		
A-KLASSE/CLASS (W169)					
A 150; A 160 (169.031, 169.331); A 170; A 180 (169.032, 169.332); A 200; A 200 TURBO (169.034, 169.334)	M266.920; M266.940; M266.960; M266.980; (70kW-142kW)	1498-2034	09.04-		
A 160 CDI; A 180 CDI; A 200 CDI	OM640.940; OM640.941; OM640.942; (60kW-103kW)	1991	09.04-		
B-KLASSE/CLASS (W245)					
B 150 (245.231); B 160 (245.231); B 170 (245.232); B 170 NGT (245.233); B 180 (245.232); B 180 NGT (245.233); B 200; B 200 TURBO (245.234)	M266.920; M266.940; M266.960; M266.980; (70kW-142kW)	1498-2034	03.05-		
B 180 CDI (245.207); B 200 CDI (245.208)	OM640.940; OM640.941; (80kW-103kW)	1991	03.05-		
C KLASSE/CLASS (W204)					
C 180 compressor	(115kW)	1597	01.08-		
C 180 CGI	(115kW)	1796	01.07-		
C 180 compressor (204.046)	M271.952; (115kW)	1796	01.07-		
C 200 CGI	(135kW)	1796	01.07-		
C 200 compressor (204.041)	M271.950; (135kW)	1796	01.07-		
C 250 CGI	(150kW)	1796	07.09-		
C 230 (204.052); C 230 4-matic (204.085); C 280 (204.054); C 280 4-matic (204.081); C 300; C 300 4-matic; C 350 (204.054); C 350 4-matic (204.087)	M272.911; M272.921; M272.947; M272.948; M272.962; M272.971; (150kW-200kW)	2496-3498	01.07-		
C 350 CGI	(215kW)	3498	09.08-		
C 63 AMG	M156.985; (336kW)	6208	02.08-		
C 220 CDI (204.002)	(125kW)	2143	12.08-		
C 250 CDI	(150kW)	2143	08.08-		
C 200 CDI (204.007); C 220 CDI (204.008)	OM646.811; (100kW-125kW)	2148	01.07-		
C 320 CDI (204.022); C 320 CDI 4-matic (204.089); C 350 CDI; C 350 CDI (204.025); C 350 CDI 4-matic; C 350 CDI 4-matic (204.092)	OM642.832; OM642.960; OM642.961; (165kW-170kW)	2987	01.07-		
C KLASSE/CLASS T-MODEL (S204)					
C 180 compressor	(115kW)	1597	01.08-		
C 180 compressor; C 200 compressor	M271.950; M271.952; (115kW-135kW)	1796	08.07-		
C 230; C 280; C 350	M272.921; M272.947; M272.961; (150kW-200kW)	2496-3498	08.07-		
C 63 AMG	M156.985; (336kW)	6208	02.08-		
C 220 CDI (204.202)	(125kW)	2143	12.08-		
C 200 CDI; C 220 CDI	OM646.811; (100kW-125kW)	2148	08.07-		
C 320 CDI; C 320 CDI 4-matic; C 350 CDI (204.225); C 350 CDI 4-matic (204.292)	OM642.960; OM642.961; (165kW-170kW)	2987	08.07-		
C-KLASSE/CLASS (S/W202)					
C 180	M111.921; (89kW)	1799	11.94-05.00		
C 180; C 180 T	M111.920; M111.921; (90kW)	1799	03.93-09.00		
C 180 T	M111.952; (95kW)	1998	09.00-03.01		
C 200; C 200 T	M111.941; M111.945; (100kW)	1998	01.94-03.01		
C 200 T compressor	M111.956; (120kW)	1998	09.00-03.01		
C 200 compressor; C 200 T	M111.944; (132kW-141kW)	1998	10.95-03.01		
C 220; C 230; C 230 T	M111.961; M111.974; (110kW)	2199-2295	03.93-05.00		
C 230 compressor; C 230 T compressor	M111.975; (142kW)	2295	10.95-09.00		
C 240; C 240 T	M112.910; M112.915; (125kW)	2398-2597	06.97-03.01		
C 280	M104.941; (142kW)	2799	05.93-05.00		

RUVILLE YOUR PARTNER

Mercedes-Benz

215101					24	265150					215101:(ELV), 005792→
215101					24	265150					215101:(ELV)
215102											215102:(ALV)
					32	265150					
215113					8	265118					
215111					10	265118					
215112					12	265118					
	16	235116			16	265119					
					8	265102					
	16	235102			16	265106					
	16	235100 [6]									
					8	265102					
	16	235118			16	265165					
					8	265102					
	24	235118			24	265165					
					16	265109					265109: M271.910
	16	235107			16	265165					
	16	235107			16	265109					235107: 31216220→; 265109: →31216219
					16	265165					265165: 31216220→
	16	235107			16	265165					
	16	235107			16	265109					235107: 31216220→; 265109: →31216219
					16	265165					265165: 31216220→
	16	235107			16	265165					
	24	235117			24	265165					
					24	265165					265165: M272.985
					32	265108					
	16	235106			16	265110					
	16	235106			16	265110					235106: OM651.911; 265110: OM651.911
					16	265140					
	24	235118			24	265165					
					16	265109					265109: M271.910
	16	235107			16	265109					235107: 31216220→; 265109: →31216219
					16	265165					265165: 31216220→
	24	235117			24	265165					
					32	265108					
	16	235106			16	265110					
					16	265140					
	24	235118			24	265165					
					16	265150					
215160					16	265150					215160:(ELV), M111.920
215161											215161:(ALV), M111.920
					16	265150					
215160					16	265150					215160:(ELV), M111.941
215161											215161:(ALV), M111.941
					16	265150					
215161					16	265150					215161:(ALV)
215161					16	265150					215161:(ALV)
215162											215162:(ELV)
215162					16	265150					215162:(ELV)
	6	245110 [6]			12	265102					245110:(ELV); 265102:(ELV)
	6	245111 [6]			6	265104					245111:(ELV); 265104:(ALV)
	6	245112 [6]									245112:(ALV)
215101					24	265150					215101:(ELV)
215102											215102:(ALV)

6 siehe Klappseite vorn • see fold in front.

		cm³			

Mercedes-Benz

C-KLASSE/CLASS (S/W202)					
C 280; C 280 T	M112.920; (145kW)	2799	06.97-03.01		
C 36 AMG	M104.941; (206kW)	3606	05.94-05.00		
C 43 AMG	M113.944; (225kW)	4266	08.97-03.01		
C 200 D	OM601.913; (55kW)	1997	03.93-05.00		
C 200 CDI; C 200 T CDI; C 220 CDI; C 220 T CDI	OM611.960; (75kW-92kW)	2151	09.97-03.01	225114	
C-KLASSE/CLASS (CL/S/W203)					
C 160 compressor (203.730); C 180 compressor; C 200 CGI; C 200 compressor; C 230 compressor	M271.921; M271.940; M271.942; M271.946; M271.948; (90kW-141kW)	1796	05.02-		
C 180; C 200 compressor; C 230 compressor	M111.951; M111.955; M111.981; (95kW-145kW)	1998-2295	05.00-05.02		
C 230; C 230 (203.052); C 230 (203.252)	M272.920; (150kW)	2496	01.05-		
C 240	M112.912; M112.916; (125kW)	2597	05.00-		
C 280; C 280 4-matic	M272.940; M272.941; (170kW)	2996	01.05-		
C 32 AMG; C 320	M112.946; M112.953; M112.961; (160kW-260kW)	3199	05.00-		
C 350; C 350 4-matic	M272.960; M272.970; (200kW)	3498	01.05-		
C 200 CDI	OM646.962; (75kW)	2148	02.01-		
C 200 CDI	OM611.962; (85kW)	2148	09.00-	225114	
C 200 CDI	OM646.962; (90kW)	2148	04.03-		
C 220 CDI	OM611.962; (105kW)	2148	05.00-	225114	
C 220 CDI	OM646.963; (110kW)	2148	02.04-		
C 270 CDI; C 30 CDI	OM612.962; OM612.990; (125kW-170kW)	2685-2950	12.00-		
C 320 CDI; C 320 CDI (203.220)	OM642.910; (165kW)	2987	01.05-		
CLC-KLASSE/CLASS					
CLC 160 (203.731)	(95kW)	1597	02.09-		
CLC 180 compressor	M271.946; (105kW)	1796	05.08-		
CLC 200 compressor	M271.955; (135kW)	1796	05.08-		
CLC 230; CLC 350	M272.920; M272.960; (150kW-200kW)	2496-3498	05.08-		
CLC 200 CDI; CLC 220 CDI	OM646.962; OM646.963; (90kW-110kW)	2148	05.08-		
CLK (A/C208)					
200	M111.941; M111.945; (100kW)	1998	06.97-06.02		
200 compressor	M111.956; (120kW)	1998	06.00-06.02		
200 compressor	M111.944; (141kW)	1998	06.97-06.00		
230 compressor	M111.973; M111.975; (142kW)	2295	06.97-06.00		
230 compressor	M111.982; (145kW)	2295	06.00-06.02		
320	M112.940; (160kW)	3199	06.97-06.02		
430; 55 AMG	M113.943; M113.981; M113.984; (205kW-255kW)	4266-5439	07.98-06.02		
CLK (A/C209)					
200 compressor	M271.940; (120kW)	1796	09.02-		
200 CGI	M271.942; (125kW)	1796	07.03-		
200 CGI compressor	M271.942; (125kW)	1796	07.03-		
200 compressor	M271.955; (135kW)	1796	10.06-		
240	M112.912; (125kW)	2597	06.02-		
280	M272.940; (170kW)	2996	01.05-		
320	M112.955; (160kW)	3199	06.02-		
350	M272.960; (200kW)	3498	01.05-		
500	M113.968; (225kW)	4966	06.02-		

RUVILLE YOUR PARTNER

Mercedes-Benz

	6	245110 [6]			12	265102					245110:(ELV); 265102:(ELV)
	6	245111 [6]			6	265104					245111:(ELV); 265104:(ALV)
	6	245112 [6]									245112:(ALV)
					24	265150					
	8	245110 [6]			16	265102					245110:(ELV); 265102:(ELV)
	8	245111 [6]			8	265104					245111:(ELV); 265104:(ALV)
	8	245112 [6]									245112:(ALV)
215107					8	265118					
215115					16	265140					225114:(ELV); 215115:(ELV)
	16	235103			16	265109					235103: →30677490; 265109: →31216219
	16	235107			16	265165					235107: 31216220→; 265165: 31216220→
					16	265150					
	24	235117			24	265165					
	6	245110 [6]			12	265102					245110:(ELV); 265102:(ELV)
	6	245111 [6]			6	265104					245111:(ELV); 265104:(ALV)
	6	245112 [6]									245112:(ALV)
	24	235117			24	265165					
	6	245110 [6]			12	265102					245110:(ELV); 265102:(ELV)
	6	245111 [6]			6	265104					245111:(ELV); 265104:(ALV)
	6	245112 [6]									245112:(ALV)
	24	235117			24	265165					
					16	265140					
215115					16	265140					225114:(ELV); 215115:(ELV)
					16	265140					
215115					16	265140					225114:(ELV); 215115:(ELV)
					16	265140					
					20	265140					
	24	235118			24	265165					
	16	235107			16	265109					235107: M271.911, 31216220→; 265109: M271.911, →31216219
					16	265165					265165: M271.911, 31216220→
	16	235103			16	265109					235103: →30677490; 265109: →31216219
	16	235107			16	265165					235107: 31216220→; 265165: 31216220→
	16	235107			16	265109					235107: 31216220→; 265109: →31216219
					16	265165					265165: 31216220→
	24	235117			24	265165					
					16	265140					
215160					16	265150					215160:(ELV), M111.941
215161											215161:(ALV), M111.941
					16	265150					
215161					16	265150					215161:(ALV)
215161					16	265150					215161:(ALV)
215162											215162:(ELV)
					16	265150					
	6	245110 [6]			12	265102					245110:(ELV); 265102:(ELV)
	6	245111 [6]			6	265104					245111:(ELV); 265104:(ALV)
	6	245112 [6]									245112:(ALV)
	8	245110 [6]			16	265102					245110:(ELV), (-ZAS); 265102:(ELV)
	8	245111 [6]			8	265104					245111:(ELV); 265104:(ALV)
	8	245112 [6]									245112:(ALV)
	16	235103			16	265109					235103: →30677490; 265109: →31216219
	16	235107			16	265165					235107: 31216220→; 265165: 31216220→
	16	235103			16	265109					235103: →30677490; 265109: →31216219
					16	265165					265165: 31216220→
	16	235103			16	265109					235103: →30677490; 265109: →31216219
	16	235107			16	265165					235107: 31216220→; 265165: 31216220→
	16	235107			16	265109					235107: 31216220→; 265109: →31216219
					16	265165					265165: 31216220→
	6	245110 [6]			12	265102					245110:(ELV); 265102:(ELV)
	6	245111 [6]			6	265104					245111:(ELV); 265104:(ALV)
	6	245112 [6]									245112:(ALV)
	24	235117			24	265165					
	6	245110 [6]			12	265102					245110:(ELV); 265102:(ELV)
	6	245111 [6]			6	265104					245111:(ELV); 265104:(ALV)
	6	245112 [6]									245112:(ALV)
	24	235117			24	265165					
	8	245110 [6]			16	265102					245110:(ELV), (-ZAS); 265102:(ELV)

6 siehe Klappseite vorn • see fold in front.

		cm³			
Mercedes-Benz					
CLK (A/C209)					
500	M113.968; (225kW)	4966	06.02-		
55 AMG	M113.987; (270kW)	5439	09.02-		
5.5 500; 500	M273.965; M273.967; (285kW)	5461	06.06-		
6.2; 63 AMG (209.377); 63 AMG (209.477)	M156.982; (354kW-373kW)	6208	04.06-		
220 CDI	OM646.966; (110kW)	2148	01.05-		
270 CDI	OM612.962; OM612.967; (125kW)	2685	10.02-		
320 CDI	OM642.910; (165kW)	2987	01.05-		
CLS (C219)					
280; 300; 350	M272.943; M272.964; (170kW-200kW)	2996-3498	10.04-		
350 (219.357); 350 CGI	M272.985; (215kW)	3498	04.06-		
500	M113.967; (225kW)	4966	10.04-		
500	M273.960; (285kW)	5461	04.06-		
CLS 63 AMG	M156.983; (378kW)	6208	04.06-		
320 CDI; 350 CDI	OM642.910; OM642.920; (165kW)	2987	01.05-		
E-CLASS CABRIOLET (A207)					
E 200 CGI (207.448); E 250 CGI (207.447)	M271.820; M271.860; (135kW-150kW)	1796	01.10-		
E 350 CGI (207.457)	M272.982; M272.984; (215kW)	3498	01.10-		
E 500 (207.472)	M273.966; (285kW)	5461	01.10-		
E 220 CDI (207.402); E 250 CDI (207.403)	OM651.911; (125kW-150kW)	2143	01.10-		
E 350 CDI (207.422)	OM642.836; (170kW)	2987	01.10-		
E-KLASSE/CLASS (A/C/S/W124)					
E 200; E 200 T	M111.940; (100kW)	1998	06.93-03.98		
E 220; E 220 T	M111.960; (110kW)	2199	06.93-03.98		
E 280; E 280 T	M104.942; (142kW-145kW)	2799	06.93-06.96		
E 300; E 300 T	M103.985; (132kW)	2960	06.93-06.96	225110	
E 300 TE-24 AMG (124.091)	M104.980; (162kW)	2960	06.93-06.96		
E 320; E 320 T; E 36 AMG; E 36 T AMG	M104.992; M104.995; (162kW-200kW)	3199-3606	06.93-03.98		
E 420; E 500; E 60 AMG	M119.974; M119.975; (205kW-280kW)	4196-5956	06.93-06.95		
E 200 D	OM601.912; (55kW)	1997	06.93-06.95	225113	
E 250 TURBO D	OM602.962; (93kW)	2497	06.93-06.96	225111	
E 300 T TURBO D; E 300 TURBO D	OM603.960; OM603.963; (108kW)	2996	06.93-06.96	225112	
E-KLASSE/CLASS (C207)					
E 200 CGI (207.348); E 250 CGI	M271.860; (135kW-150kW)	1796	01.09-		
E 350 CGI	M272.982; M272.984; (215kW)	3498	01.09-		
E 500	M273.966; (285kW)	5461	01.09-		
E 220 CDI (207.302); E 250 CDI	OM651.911; (125kW-150kW)	2143	01.09-		
E 350 CDI	OM642.836; (170kW)	2987	01.09-		
E-KLASSE/CLASS (S/W210)					
E 200; E 200 T	M111.942; (100kW)	1998	06.95-08.00		
E 200 compressor; E 200 T compressor	M111.947; M111.957; (120kW-137kW)	1998	06.97-03.03		
E 230; E 230 T	M111.970; (110kW)	2295	06.95-06.97		
E 240; E 240 T	M112.911; M112.914; (125kW)	2398-2597	06.97-03.03		
E 280	M104.945; (142kW)	2799	01.96-06.97		
E 280; E 280 T	M112.921; (150kW)	2799	12.96-03.03		
E 320	M104.992; (162kW)	3199	06.95-06.97		
E 320; E 320 T	M112.941; (165kW)	3199	12.96-03.03		
E 36 AMG	(200kW)	3606	04.96-01.98		

RUVILLE YOUR PARTNER

Mercedes-Benz

	8	245111 [6]			8	265104					245111:(ELV); 265104:(ALV)
	8	245112 [6]									245112:(ALV)
	8	245110 [6]			16	265102					245110:(ELV); 265102:(ELV)
	8	245111 [6]			8	265104					245111:(ELV); 265104:(ALV)
	8	245112 [6]									245112:(ALV)
	32	235117			32	265165					
					32	265108					
					16	265140					
					20	265140					
	24	235118			24	265165					
	24	235117			24	265165					
					24	265165					
	8	245110 [6]			16	265102					245110:(ELV); 265102:(ELV)
	8	245111 [6]			8	265104					245111:(ELV); 265104:(ALV)
	8	245112 [6]									245112:(ALV)
	32	235117			32	265165					
					32	265108					
	24	235118			24	265165					
	16	235107			16	265165					
	24	235108			24	265165					
	32	235117			32	265165					
	16	235106			16	265110					
	24	235118			24	265165					
215160					16	265150					215160:(ELV)
215161											215161:(ALV)
215161					16	265150					215161:(ALV)
215162											215162:(ELV)
215101					24	265150					215101:(ELV)
215102											215102:(ALV)
215110	12	245108			12	265113					
					24	265150					265150: →000282, (M.T.), {-AUS}
											265150: →000704, (A.T.), {-AUS}
											265150: →000718, (M.T.), {AUS}
											265150: →003032, (A.T.), {AUS}
											265150: 008694→, (M.T.)
											265150: 040890→, (A.T.)
215101					24	265150					215101:(ELV)
215102											215102:(ALV)
					32	265150					
215113					8	265118					
215111					10	265118					
215112					12	265118					
	16	235107			16	265165					
					24	265165					
	32	235117			32	265165					
	16	235106			16	265110					
	24	235118			24	265165					
215160					16	265150					215160:(ELV), →111.942-10-022019, →111.942-50-022019, →111.942-20-022019, →111.942-60-022019, →111.942-12-016444, →111.942-52-016444, →111.942-22-016444, →111.942-62-016444
					16	265150					
215161					16	265150					215161:(ALV)
215162											215162:(ELV)
	6	245110 [6]			12	265102					245110:(ELV); 265102:(ELV)
	6	245111 [6]			6	265104					245111:(ELV); 265104:(ALV)
	6	245112 [6]									245112:(ALV)
215101					24	265150					215101:(ELV)
215102											215102:(ALV)
	6	245110 [6]			12	265102					245110:(ELV); 265102:(ELV)
	6	245111 [6]			6	265104					245111:(ELV); 265104:(ALV)
	6	245112 [6]									245112:(ALV)
215101					24	265150					215101:(ELV)
215102											215102:(ALV)
	6	245110 [6]			12	265102					245110:(ELV); 265102:(ELV)
	6	245111 [6]			6	265104					245111:(ELV); 265104:(ALV)
	6	245112 [6]									245112:(ALV)
					24	265150					

6 siehe Klappseite vorn • see fold in front.

		cm³			
E-KLASSE/CLASS (S/W210)					
E 420; E 420 T	M119.985; (205kW)	4196	01.96-06.97		
E 430; E 430 T	M113.940; (205kW)	4266	06.97-03.03		
E 50 AMG	M119.985; (255kW)	4973	02.96-08.97		
E 55 AMG; E 55 T AMG	M113.980; (260kW)	5439	08.97-03.03		
E 200 CDI; E 220 CDI; E 220 T CDI	OM611.961; (75kW-105kW)	2148-2151	06.98-03.03	225114	
E 270 CDI; E 270 T CDI	OM612.961; (125kW)	2685	07.99-03.03		
E 290 T TURBO D; E 290 TURBO D	OM602.982; (95kW)	2874	03.96-07.99		
E 320 CDI; E 320 T CDI	OM613.961; (145kW)	3226	07.99-03.03		
E-KLASSE/CLASS (S/W211)					
E 200 compressor	M271.941; (120kW)	1796	11.02-		
E 200 CGI; E200 NGT	M271.941; M271.946; (120kW-125kW)	1796	11.02-		
E 200 compressor (211.041); E 200 compressor (211.241)	M271.956; (135kW)	1796	04.06-		
E 230; E 230 T	M272.922; (150kW)	2496	05.07-		
E 240	M112.913; M112.917; (130kW)	2597	03.02-		
E 280; E 280 4-matic; E 280 T 4-matic	M272.943; (170kW)	2996	03.05-		
E 320	M112.949; M112.954; (165kW)	3199	03.02-		
3.5 4-matic; E 350; E 350 4-matic (211.087); E 350 T 4-matic (211.287)	M272.964; M272.972; (200kW-205kW)	3498	08.04-		
3.5; E 350 CGI	M272.985; (215kW)	3498	05.06-		
E 500; E 55 AMG; E 55 AMG compressor	M113.967; M113.969; M113.990; (225kW-350kW)	4966-5439	03.02-		
E 500 (211.072); E 500 4-matic (211.090); E 500 T (211.272); E 500 T 4-matic (211.290)	M273.960; M273.962; (285kW)	5461	04.06-		
E 63 AMG (211.077); E 63 AMG (211.277)	M156.983; (378kW)	6208	03.06-		
E 250 CDI	(150kW)	2143	08.08-		
200 CDI (211.007); 220 CDI (211.006); 220 CDI (211.206); E 200 CDI; E 200 CDI (211.207); E 220 CDI; E 220 CDI (211.008); E 220 T CDI (211.208)	OM646.820; OM646.821; OM646.951; OM646.961; (75kW-125kW)	2148	03.02-		
E 270 CDI	OM647.961; (130kW)	2685	03.02-		
E 280 CDI; E 280 CDI 4-matic; E 280 T CDI 4-matic; E 300 BLUETEC; E 320 CDI; E 320 CDI 4-matic; E 320 T CDI 4-matic	OM642.910; OM642.920; OM642.921; (140kW-165kW)	2987	03.05-		
E 280 CDI; E 320 CDI	OM648.961; (130kW-150kW)	3222	11.02-		
E 400 CDI; E 420 CDI (211.029)	OM628.961; OM629.910; (191kW-231kW)	3996	02.03-		
E-KLASSE/CLASS (W212)					
E 200 CGI; E 250 CGI	M271.820; M271.860; (135kW-150kW)	1796	01.09-		
E 350 4-matic	M272.977; (200kW)	3498	01.09-		
E 350 CGI	M272.983; (215kW)	3498	01.09-		
E 500; E 500 4-matic	M273.970; M273.971; (285kW)	5461	01.09-		
E 63 AMG	M156.985; (386kW)	6208	12.09-		
E 200 CDI; E 220 CDI; E 250 CDI	OM651.924; OM651.925; (100kW-150kW)	2143	01.09-		
E 350 BlueTEC; E 350 CDI; E 350 CDI 4-matic (212.089, 212.093)	OM642.850; OM642.856; OM642.858; (155kW-170kW)	2987	01.09-		
E-KLASSE/CLASS T-MODEL (S212)					
E 200 CGI; E 250 CGI	M271.820; M271.860; (135kW-150kW)	1796	11.09-		
E 350 4-matic	M272.977; (200kW)	3498	11.09-		
E 350 CGI	M272.983; (215kW)	3498	11.09-		
E 500	M273.971; (285kW)	5461	11.09-		
E 63 AMG	M156.985; (386kW)	6208	08.09-		
E 200 CDI; E 220 CDI; E 250 CDI	OM651.924; OM651.925; (100kW-150kW)	2143	11.09-		
E 350 BlueTEC (212.224); E 350 CDI; E 350 CDI 4-matic	OM642.850; OM642.852; (155kW-170kW)	2987	11.09-		
G-KLASSE/CLASS (W460)					
230 GE	M102.979; M102.987; (90kW)	2298	05.87-08.92	225103	
230 GE	M102.981; M102.987; (92kW)	2299	04.82-08.92	225103 225104	
230 G	M115.973; (66kW)	2307	03.79-07.93	225125	

RUVILLE YOUR PARTNER

Mercedes-Benz

					32	265150					
	8	245110 [6]			16	265102					245110:(ELV); 265102:(ELV)
	8	245111 [6]			8	265104					245111:(ELV); 265104:(ALV)
	8	245112 [6]									245112:(ALV)
					32	265150					
	8	245110 [6]			16	265102					245110:(ELV); 265102:(ELV)
	8	245111 [6]			8	265104					245111:(ELV); 265104:(ALV)
	8	245112 [6]									245112:(ALV)
215115					16	265140					225114:(ELV); 215115:(ELV)
					20	265140					
215114					10	265118					
					24	265140					
	16	235103			16	265109					235103: →30677490; 265109: →31216219
	16	235107			16	265165					235107: 31216220→; 265165: 31216220→
	16	235103			16	265109					235103: →30677490; 265109: →31216219
					16	265165					265165: 31216220→
	16	235107			16	265109					235107: 31216220→; 265109: →31216219
					16	265165					265165: 31216220→
	24	235117			24	265165					
	6	245110 [6]			12	265102					245110:(ELV); 265102:(ELV)
	6	245111 [6]			6	265104					245111:(ELV); 265104:(ALV)
	6	245112 [6]									245112:(ALV)
	24	235117			24	265165					
	6	245110 [6]			12	265102					245110:(ELV); 265102:(ELV)
	6	245111 [6]			6	265104					245111:(ELV); 265104:(ALV)
	6	245112 [6]									245112:(ALV)
	24	235117			24	265165					
					24	265165					
	8	245110 [6]			16	265102					245110:(ELV), (-ZAS); 265102:(ELV)
	8	245111 [6]			8	265104					245111:(ELV); 265104:(ALV)
	8	245112 [6]									245112:(ALV)
	32	235117			32	265165					
					32	265108					
	16	235106			16	265110					235106: OM651.911; 265110: OM651.911
					16	265140					
					20	265140					
	24	235118			24	265165					
					24	265140					
					32	265140					
	16	235107			16	265165					
	24	235117			24	265165					
					24	265165					
	32	235117			32	265165					
					32	265108					
	16	235106			16	265110					
	24	235118			24	265165					
	16	235107			16	265165					
	24	235117			24	265165					
					24	265165					
	32	235117			32	265165					
					32	265108					
	16	235106			16	265110					
	24	235118			24	265165					
215109	8	245104			8	265113					225103: M102.979; 215109: M102.979; 245104: M102.979
											225103: M102.987, 001991→, 001050→; 215109: M102.987, 001991→, 001050→; 245104: M102.987, 001991→, 001050→
215108	8	245104			8	265113					225103: M102.987, 001991→, 001050→; 215108: M102.981; 245104: M102.987, 001991→, 001050→; 265113: M102.987
215109	8	245106									225104: M102.981; 215109: M102.987, 001991→, 001050→; 245106: M102.981
215171											

6 siehe Klappseite vorn • see fold in front.

RUVILLE
YOUR PARTNER

		cm³			

Mercedes-Benz

G-KLASSE/CLASS (W460)					
280 GE	M110.994; (110kW-115kW)	2746	11.79-08.89	225180	
240 GD	OM616.936; (53kW)	2399	03.79-08.87		
250 GD	OM602.930; (62kW-68kW)	2497	10.87-12.92	225111	
300 GD	OM617.931; (65kW)	2998	12.79-12.91		
G-KLASSE/CLASS (W461)					
230 GE	M102.979; M102.996; M102.997; (90kW-92kW)	2298	02.93-		
250 GD; 290 GD/G 290 D; G 290 TD	OM602.939; OM602.942; OM602.983; (68kW-88kW)	2497-2874	02.90-		
G-KLASSE/CLASS (W463)					
200 GE (463.221)	M102.965; (80kW)	1996	01.90-07.93		
230 GE	M102.989; (93kW)	2298	06.90-06.93		
300 GE	M103.987; (125kW-128kW)	2960	09.89-	225110	
320 GE; G 320	M104.996; (155kW)	3199	09.94-12.97		
G 320	M112.945; (158kW)	3199	07.97-		
G 36 AMG	(200kW)	3606	01.95-		
G 500	M113.962; (218kW)	4966	04.98-		
G 500 E	M117.965; (177kW)	4973	09.93-		
G 55 AMG	M113.982; (260kW)	5439	04.99-		
250 GD	OM602.931; (69kW)	2497	06.90-	225111	
G 270 CDI	OM612.966; (115kW)	2685	10.01-		
G 320 CDI	OM642.970; (165kW)	2987	09.06-		
300 GD; 350 G TURBO D; 350 GD TD	OM603.931; OM603.972; (83kW-100kW)	2996-3449	09.89-	225112	
G 400 CDI	OM628.962; (184kW)	3996	12.00-		
GLK-KLASSE/CLASS (X204)					
280 4-matic; 300 4-matic; 350 4-matic	M272.948; M272.971; (170kW-200kW)	2996-3498	06.08-		
220 CDI; 220 CDI 4-matic; 250 CDI 4-matic	(125kW-150kW)	2143	12.08-		
320 CDI 4-matic; 350 CDI 4-matic (204.992)	OM642.832; OM642.961; (165kW)	2987	06.08-		
GL-KLASSE/CLASS					
GL 450; GL 500	M273.923; M273.963; (250kW-285kW)	4663-5461	09.06-		
GL 320 CDI; GL 350 CDI; GL 350 CDI BlueTEC (164.824, 164.825)	OM642.820; OM642.940; (155kW-165kW)	2987	09.06-		
GL 420 CDI; GL 450 CDI	OM629.912; (225kW)	3996	09.06-		
M-KLASSE/CLASS (W163)					
ML 230	M111.977; (110kW)	2295	02.98-06.05		
ML 320 V6; ML 350	M112.942; M112.970; (160kW-180kW)	3199-3724	02.98-06.05		
ML 430; ML 500; ML 55 AMG	M113.942; M113.964; M113.965; M113.981; (200kW-255kW)	4266-5439	02.98-06.05		
ML 270 CDI	OM612.963; (120kW)	2685	12.99-06.05		
ML 400 CDI	OM628.963; (184kW)	3996	09.01-06.05		
M-KLASSE/CLASS (W164)					
M 350 (164.186)	M272.962; M272.967; (200kW)	3498	07.05-		
M 500 (164.175)	M113.964; (225kW)	4966	07.05-		
ML 500 4-matic	M273.963; (285kW)	5461	12.07-		
ML 63 AMG	M156.980; (375kW)	6208	01.06-		
M 280 CDI (164.120); M 320 CDI (164.122); ML 300 CDI 4-matic; ML 300 CDI 4-matic (164.121); ML 350 BlueTEC 4-matic; ML 350 CDI 4-matic; ML 350 CDI 4-matic (164.125)	OM642.940; (140kW-170kW)	2987	07.05-		
ML 420 CDI 4-matic (164.128); ML 450 CDI 4-matic	OM629.912; (225kW)	3996	02.06-		
R-KLASSE/CLASS (W251)					
R 280 (251.054); R 300; R 350; R 350 (251.056, 251.156)	M272.945; M272.967; (170kW-200kW)	2996-3498	01.06-		
R 500	M113.971; (225kW)	4966	01.06-		
R 500 4-matic (251.072, 251.172)	M273.963; (285kW)	5461	01.07-		
R 63 AMG (251.177)	M156.980; (375kW)	6208	02.06-		
R 280 CDI (251.020); R 280 CDI (251.026, 251.126); R 300 CDI; R 300 CDI 4-matic; R 320 CDI; R 350 4-matic; R 350 CDI 4-matic	OM642.950; (140kW-165kW)	2987	01.06-		

RUVILLE YOUR PARTNER

Mercedes-Benz

215180	12	235110									215180:(ELV)
215181											215181:(ALV)
	12	235110									
215111					10	265118					
215103			1	255108							
					8	265113					
					10	265118					
	8	245104			8	265113					
					8	265113					
215110	12	245108			12	265113					
215101					24	265150					215101:(ELV)
215102											215102:(ALV)
	6	245110 [6]			12	265102					245110:(ELV); 265102:(ELV)
	6	245111 [6]			6	265104					245111:(ELV); 265104:(ALV)
	6	245112 [6]									245112:(ALV)
					24	265150					265150: M104.996
	8	245110 [6]			16	265102					245110:(ELV), (-ZAS); 265102:(ELV)
	8	245111 [6]			8	265104					245111:(ELV); 265104:(ALV)
	8	245112 [6]									245112:(ALV)
215199					16	265119					215199:(R), 016683→
	8	245110 [6]			16	265102					245110:(ELV); 265102:(ELV)
	8	245111 [6]			8	265104					245111:(ELV); 265104:(ALV)
	8	245112 [6]									245112:(ALV)
215111					10	265118					
					20	265140					
	24	235118			24	265165					
215112					12	265118					
					32	265140					
	24	235117			24	265165					
	16	235106			16	265110					
	24	235118			24	265165					
	32	235117			32	265165					
	24	235118			24	265165					
					32	265140					
215161					16	265150					215161:(ALV)
215162											215162:(ELV)
	6	245110 [6]			12	265102					245110:(ELV); 265102:(ELV)
	6	245111 [6]			6	265104					245111:(ELV); 265104:(ALV)
	6	245112 [6]									245112:(ALV)
	8	245110 [6]			16	265102					245110:(ELV), (-ZAS); 265102:(ELV)
	8	245111 [6]			8	265104					245111:(ELV); 265104:(ALV)
	8	245112 [6]									245112:(ALV)
					20	265140					
					32	265140					
	24	235117			24	265165					235117: M272.967; 265165: M272.967
	8	245110 [6]			16	265102					245110:(ELV); 265102:(ELV)
	8	245111 [6]			8	265104					245111:(ELV); 265104:(ALV)
	8	245112 [6]									245112:(ALV)
	32	235117			32	265165					
					32	265108					
	24	235118			24	265165					
					32	265140					
	24	235117			24	265165					
	8	245110 [6]			16	265102					245110:(ELV); 265102:(ELV)
	8	245111 [6]			8	265104					245111:(ELV); 265104:(ALV)
	8	245112 [6]									245112:(ALV)
	32	235117			32	265165					
					32	265108					
	24	235118			24	265165					

		cm³			

Mercedes-Benz

S-KLASSE/CLASS (W108, W109)					
280 SE,SEL; 300 SEL 3.5	M116.981; M130.980; (118kW-147kW)	2780-3500	01.68-08.72		
S-KLASSE/CLASS (W116)					
280 S; 280 SE,SEL	M110.922; M110.983; M110.985; (115kW-136kW)	2746	08.72-07.80	225180	
350 SE,SEL	M116.985; (143kW)	3499	03.76-03.80		
350 SE,SEL	M116.983; (147kW)	3499	08.72-02.76		
350 SE,SEL	M116.985; (151kW)	3499	03.76-03.80		
450 SE,SEL	M117.985; M117.986; (160kW)	4520	12.75-04.80	225109	
450 SE,SEL	M117.983; M117.986; (165kW)	4520	01.73-04.80	225109	
450 SEL 6.9	M100.985; (210kW)	6834	07.75-03.80		
S-KLASSE/CLASS (C/W126)					
260 SE	M103.941; (118kW-122kW)	2597	09.85-06.91	225110	
280 S; 280 SE,SEL	M110.924; M110.926; M110.987; M110.989; (115kW-136kW)	2746	10.79-07.85	225180	
300 SE,SEL	M103.981; (132kW-138kW)	2960	09.85-06.91	225110	
3.8	M116.960; (160kW)	3818	08.80-08.84		
380 SE,SEL; 380 SEC	M116.963; (150kW)	3839	12.79-08.85	225106	
380 SE,SEL	M116.961; (160kW)	3839	12.85-12.86		
420 SE,SEL; 420 SEC	M116.965; (150kW-170kW)	4196	10.85-06.91	225121	
500 SE,SEL; 500 SEC	M117.965; (164kW)	4973	09.85-06.91	225121	
500 SE,SEL; 500 SEC	M117.961; M117.963; (170kW-177kW)	4973	12.79-08.85	225121	
500 SE,SEL; 500 SEC	M117.965; (180kW-195kW)	4973	09.85-06.91	225121	
560 SE,SEL; 560 SEC	M117.968; (178kW-220kW)	5547	10.85-06.91		
S-KLASSE/CLASS (C/W140)					
300 SE 2.8; S 280	M104.944; (142kW-145kW)	2799	01.93-10.98		
3.2	M104.990; (162kW)	3199	10.95-08.98		
300 SE,SEL/S320	M104.990; M104.994; (170kW)	3199	03.91-10.98		
400 SE,SEL/S420; 500 SE,SEL; S 420; S 500; SEC/CL 420; SEC/CL 500	M119.970; M119.971; M119.980; M119.981; (205kW-240kW)	4196-4973	02.91-02.99		
600 SE,SEL; S 600; SEC/CL 600	M120.980; M120.982; (290kW-300kW)	5987	04.91-02.99		
S 350 TURBO D	OM603.971; (110kW)	3449	01.93-10.98		
S-KLASSE/CLASS (C215)					
CL 500; CL 55 AMG	M113.960; M113.986; M113.991; (225kW-368kW)	4966-5439	03.99-03.06		
CL 600	M137.970; (270kW)	5786	03.99-03.06		
S-KLASSE/CLASS (C216)					
CL 500; CL 500 4-matic (216.386)	M273.961; M273.968; (285kW)	5461	06.06-		
S 63 AMG	M156.984; (386kW)	6208	10.06-		
S-KLASSE/CLASS (W220)					
S 280; S 320; S 350	M112.922; M112.944; M112.972; M112.975; (150kW-180kW)	2799-3724	10.98-08.05		
S 430; S 500; S 55 AMG	M113.941; M113.948; M113.960; M113.966; M113.986; M113.991; (205kW-368kW)	4266-5439	10.98-08.05		
S 600	M137.970; (270kW)	5786	01.00-08.05		
S 320 CDI	OM613.960; OM648.960; (145kW-150kW)	3222	08.99-08.05		
S 400 CDI	OM628.960; (184kW-191kW)	3996	06.00-08.05		

RUVILLE YOUR PARTNER

Mercedes-Benz

	8	235116			8	265119					235116:(L); 265119:(L)
											235116:(R); 265119:(R)
215180	12	235110									215180:(ELV)
215181											215181:(ALV)
	16	235116			16	265119					
	16	235116									
	16	235116			16	265119					
215192	16	235116			16	265119					
215193											
215192	16	235116			16	265119					225109: M117.983, 039156-039611; 215192: M117.983, 039156-039611; 265119: M117.983, 039156-039611
215193											225109: M117.986;215192: M117.986;265119: M117.986
											215193: M117.983, 039156-039611
											215193: M117.986
					16	265119					
215110	12	245108			12	265113					
215180	12	235110									215180:(ELV)
215181											215181:(ALV)
215110	12	245108			12	265113					
	16	235116			16	265119					
215186	16	235116			16	265119					225106:{USA}; 215186:(L), {USA}
215187											215187:(R), {USA}
215188											215188:(L)
215189											215189:(R)
	16	235116			16	265119					
215194	16	235116			16	265119					225121: →048805; 215194:(L), →048805
215195											215195:(R), →048805
215198											215198:(L), 048806→
215199											215199:(R), 048806→
215194	16	235116			16	265119					225121: →016682; 215194:(L), →016682
215195											215195:(R), →016682
215198											215198:(L), 016683→
215199											215199:(R), 016683→
215194	16	235116			16	265119					215194:(L)
215195											215195:(R)
215194	16	235116			16	265119					225121: →016682; 215194:(L), →016682
215195											215195:(R), →016682
215198											215198:(L), 016683→
215199											215199:(R), 016683→
215196	16	235116			16	265119					215196:(L), 037642→
215197											215197:(R), 037642→
215101					24	265150					215101:(ELV)
215102											215102:(ALV)
					24	265150					
215101					24	265150					215101:(ELV)
215102											215102:(ALV)
					32	265150					
					48	265150					
					12	265118					
	8	245110 [6]			16	265102					245110:(ELV), (-ZAS); 265102:(ELV)
	8	245111 [6]			8	265104					245111:(ELV); 265104:(ALV)
	8	245112 [6]									245112:(ALV)
					36	265102					
	32	235117			32	265165					
					32	265108					
	6	245110 [6]			12	265102					245110:(ELV); 265102:(ELV)
	6	245111 [6]			6	265104					245111:(ELV); 265104:(ALV)
	6	245112 [6]									245112:(ALV)
	8	245110 [6]			16	265102					245110:(ELV), (-ZAS); 265102:(ELV)
	8	245111 [6]			8	265104					245111:(ELV); 265104:(ALV)
	8	245112 [6]									245112:(ALV)
					36	265102					
					24	265140					
					32	265140					

6 siehe Klappseite vorn • see fold in front.

RUVILLE
YOUR PARTNER

		cm³			

Mercedes-Benz

S-KLASSE/CLASS (W221)					
S 350; S 350 4-matic	M272.965; (200kW)	3498	10.05-		
S 450; S 450 4-matic; S 500; S 500 4-matic	M273.922; M273.923; M273.961; (250kW-285kW)	4663-5461	10.05-		
S 63 AMG	M156.984; (386kW)	6208	10.06-		
S 320 CDI (221.022); S 320 CDI 4-matic	OM642.930; (173kW)	2987	12.05-		
S 420 CDI	OM629.911; (235kW)	3996	10.06-		
SL (C/R107)					
280 SL; 280 SLC	M110.982; M110.986; M110.990; (130kW-136kW)	2746	08.74-07.85	225180	
300 SL	M103.982; (132kW-138kW)	2960	09.85-08.89	225110	
350 SL; 350 SLC; 380 SL; 380 SLC	M116.960; M116.982; M116.984; (143kW-160kW)	3499-3818	05.71-08.81		
380 SL	M116.962; (150kW)	3839	09.80-08.85		
420 SL	M116.964; (150kW-160kW)	4196	01.86-08.89	225121	
450 SL; 450 SLC	M117.982; M117.985; (160kW-165kW)	4520	10.72-10.80	225109	
500 SL	M117.964; (164kW)	4973	01.86-08.89		
450 SLC 5.0; 500 SL	M117.960; (170kW-177kW)	4973	06.78-12.85		
500 SL	M117.960; M117.964; (180kW)	4973	01.86-08.89		
SL (R129)					
280	M104.943; (142kW)	2799	08.93-10.01		
280	M112.923; M112.925; (150kW)	2799	05.98-10.01		
300 SL	M103.984; (140kW)	2960	03.89-08.93	225110	
300 SL-24	M104.981; (170kW)	2960	03.89-07.93		
320	M112.943; (165kW)	3199	05.98-10.01		
320	M104.991; (170kW)	3199	09.93-10.01		
500	M113.961; (225kW)	4966	05.98-10.01		
500; 500 SL	M119.960; M119.972; M119.982; (235kW-240kW)	4973	09.89-10.01		
60 AMG; 600; 600 SL	M120.980; M120.981; M120.983; (280kW-300kW)	5956-5987	02.92-10.01		
SL (R230)					
280; 300; 350	M272.949; M272.966; (170kW-200kW)	2996-3498	03.06-		
350	M272.968; (232kW)	3498	04.08-		
350	M112.973; (180kW)	3724	03.03-		
500; 55 AMG	M113.963; M113.992; (225kW-350kW)	4966-5439	10.01-		
500	M273.965; (285kW)	5461	03.06-		
63AMG	M156.981; (386kW)	6208	03.08-		
SLK (R170)					
200; 200 compressor	M111.943; M111.946; M111.958; (100kW-141kW)	1998	09.96-04.04		
230 compressor	M111.973; (142kW)	2295	09.96-03.00		
230 compressor; 230K KOMPRESOR	M111.983; (144kW-145kW)	2295	01.97-12.05		
32 AMG; 320	M112.947; M112.960; (160kW-260kW)	3199	03.00-04.04		
SLK (R171)					
200 compressor	M271.944; (120kW)	1795	03.04-		
200 compressor	M271.954; (135kW)	1796	01.08-		
300 (171.454)	(170kW)	2996	04.09-		
280; 350	M272.942; M272.963; (170kW-200kW)	2996-3498	06.04-		
350	M272.969; (224kW)	3498	01.08-		

RUVILLE YOUR PARTNER

Mercedes-Benz

	24	235117			24	265165					
	32	235117			32	265165					
					32	265108					
	24	235118			24	265165					
					32	265140					
215180	12	235110									225180: M110.990; 215180:(ELV), M110.990
215181											215181:(ALV), M110.990
215110	12	245108			12	265113					
	16	235116			16	265119					
215188	16	235116			16	265119					215188:(L)
215189											215189:(R)
215194	16	235116			16	265119					215194:(L)
215195											215195:(R)
215192	16	235116			16	265119					225109: M117.982, 035996-036325; 215192: M117.982, 035996-036325; 265119: M117.982, 035996-036325
215193											225109: M117.985;215192: M117.985;265119: M117.985
											215193: M117.982, 035996-036325
											215193: M117.985
215194	16	235116			16	265119					215194:(L), M117.964
215195											215195:(R), M117.964
	16	235116			16	265119					
215194	16	235116			16	265119					215194:(L), M117.964
215195											215195:(R), M117.964
215101					24	265150					215101:(ELV)
215102											215102:(ALV)
	6	245110 [6]			12	265102					245110: M112.923, (ELV); 265102: M112.923, (ELV)
	6	245111 [6]			6	265104					245111: M112.923, (ELV); 265104: M112.923, (ALV)
	6	245112 [6]									245112: M112.923, (ALV)
215110	12	245108			12	265113					
215101					24	265150					215101:(ELV), 001134→
	6	245110 [6]			12	265102					245110:(ELV); 265102:(ELV)
	6	245111 [6]			6	265104					245111:(ELV); 265104:(ALV)
	6	245112 [6]									245112:(ALV)
215101					24	265150					215101:(ELV)
215102											215102:(ALV)
	8	245110 [6]			16	265102					245110:(ELV), (-ZAS); 265102:(ELV)
	8	245111 [6]			8	265104					245111:(ELV); 265104:(ALV)
	8	245112 [6]									245112:(ALV)
					32	265150					
					48	265150					
	24	235117			24	265165					
	24	235105			24	265165					235105: →31289393
	24	235108									235108: 31289394→
	6	245110 [6]			12	265102					245110:(ELV); 265102:(ELV)
	6	245111 [6]			6	265104					245111:(ELV); 265104:(ALV)
	6	245112 [6]									245112:(ALV)
	8	245110 [6]			16	265102					245110:(ELV), (-ZAS); 265102:(ELV)
	8	245111 [6]			8	265104					245111:(ELV); 265104:(ALV)
	8	245112 [6]									245112:(ALV)
	32	235117			32	265165					
					48	265108					
					16	265150					
215161					16	265150					215161:(ALV)
215162											215162:(ELV)
					16	265150					
	6	245110 [6]			12	265102					245110:(ELV); 265102:(ELV)
	6	245111 [6]			6	265104					245111:(ELV); 265104:(ALV)
	6	245112 [6]									245112:(ALV)
	16	235103			16	265109					235103: →30677490; 265109: →31216219
	16	235107			16	265165					235107: 31216220→; 265165: 31216220→
	16	235107			16	265109					235107: 31216220→; 265109: →31216219
					16	265165					265165: 31216220→
	24	235117			24	265165					235117: M272.942; 265165: M272.942
	24	235117			24	265165					
	24	235105			24	265165					235105: →31289393
	24	235108									235108: 31289394→

6 siehe Klappseite vorn • see fold in front.

		cm³			

Mercedes-Benz

SLS AMG (C197)					
6.2 (197.377)	(420kW)	6208	03.10-		
SPRINTER 2-T (901,902)					
214 NGT	M111.984; (92kW)	2295	04.00-05.06		
214	M111.979; M111.984; (105kW)	2295	02.95-05.06		
208 CDI; 211 CDI; 213 CDI	OM611.981; OM611.987; (60kW-95kW)	2148	04.00-05.06	225114	
208 D	OM601.943; (58kW)	2299	01.95-04.00	225113	
208 D	(60kW)	2299	09.96-04.00		
216 CDI	OM612.981; (115kW)	2685	04.00-05.06		
210 D; 212 D	OM602.980; (75kW-90kW)	2874	02.95-04.00		
SPRINTER 3,5-T (906)					
316; 316 (906.133, 906.135, 906.233, 906.235); 316 (906.633, 906.365, 906.637); 316 NGT (906.133, 906.135); 316 NGT (906.633, 906.635)	(115kW)	1796	09.08-		
324	M272.979; (190kW)	3498	06.06-		
310 CDI; 316 CDI (906.131, 906.133, 906.135, 906.231, 906.233, 906.23; 316 CDI (906.631, 906.633, 906.635, 906.637); 316 CDI 4x4 (906.131, 906.133, 906.231, 906.233); 316 CDI 4x4 (906.631, 906.633, 906.635, 906.637)	(70kW-120kW)	2143	03.09-		
309 CDI; 311 CDI 4x4 (906.133, 906.135, 906.233, 906.235); 311 CDI 4x4 (906.633, 906.635, 906.637); 311 CDI 4x4 (906.733, 906.735)	OM646.984; (65kW-80kW)	2148	06.06-		
311 CDI	OM646.985; (80kW)	2148	06.06-		
313 CDI; 315 CDI; 315 CDI 4x4 (906.133, 906.135, 906.233, 906.235); 315 CDI 4x4 (906.633, 906.635, 906.637); 315 CDI 4x4 (906.733, 906.735)	OM646.986; OM646.990; (95kW-110kW)	2148	06.06-		
318 CDI; 318 CDI 4x4 (906.133, 906.135, 906.233, 906.235); 318 CDI 4x4 (906.633, 906.635, 906.637); 318 CDI 4x4 (906.731, 906.733, 906.735); 319 CDI (906.131, 906.133, 906.135, 906.231, 906.233, 906.23; 319 CDI (906.631, 906.633, 906.635, 906.637)	OM642.992; (135kW-140kW)	2987	06.06-		
SPRINTER 3-T (903)					
308 E	(40kW)		04.00-05.06		
314 NGT	M111.984; (92kW)	2295	04.00-05.06		
314	M111.979; M111.984; (105kW)	2295	02.95-05.06		
210 CDI	(70kW)	2143	03.09-		
308 CDI; 311 CDI; 313 CDI	OM611.981; OM611.987; (60kW-95kW)	2148	04.00-05.06	225114	
2.3 D; 308 D	OM601.943; (58kW)	2299	02.95-04.00	225113	
308 D	(60kW)	2299	02.95-04.00		
316 CDI	OM612.981; (115kW)	2685	04.00-05.06		
2.9 TDi; 310 D; 312 D	OM602.980; (75kW-90kW)	2874	02.95-08.02		
SPRINTER 3-T (906)					
216; 216 (906.113, 906.213); 216 (906.613)	(115kW)	1796	09.08-		
224	M272.979; (190kW)	3498	06.06-		
210 CDI; 213 CDI; 216 CDI	(70kW-120kW)	2143	03.09-		
209 CDI	OM646.984; (65kW)	2148	06.06-		
211 CDI	OM646.985; (80kW)	2148	06.06-		
213 CDI; 215 CDI	OM646.986; OM646.990; (95kW-110kW)	2148	06.06-		
218 CDI; 219 CDI; 219 CDI (906.611, 906.613)	OM642.992; (135kW-140kW)	2987	06.06-		
SPRINTER 4,6-T (906)					
424	(190kW)	3498	06.06-		
416 CDI	(120kW)	2143	03.09-		
413 CDI; 415 CDI (906.153, 906.155, 906.253, 906.255)	(95kW-110kW)	2148	06.06-		
418 CDI; 419 CDI	(135kW-140kW)	2987	06.06-		
SPRINTER 4-T (904)					
414	M111.979; M111.984; (105kW)	2295	02.96-05.06		
408 CDI; 411 CDI; 413 CDI	OM611.981; OM611.987; (60kW-95kW)	2148	04.00-05.06	225114	
2.3 D; 408 D	OM601.943; (58kW)	2299	02.96-05.06	225113	
416 CDI	OM612.981; (115kW)	2685	04.00-05.06		
410 D; 412 D	OM602.980; (75kW-90kW)	2874	02.96-05.06		
SPRINTER 5-T (906)					
516 (906.153, 906.155, 906.253, 906.255); 516 NGT (906.153, 906.155)	(115kW)	1796	09.08-		
524; 524 (906.153, 906.155, 906.253, 905.255)	M272.979; (190kW)	3498	06.06-		
510 CDI; 516 CDI	(70kW-120kW)	2143	03.09-		
509 CDI	OM646.984; (65kW)	2148	06.06-		
511 CDI	OM646.985; (80kW)	2148	06.06-		

RUVILLE YOUR PARTNER

Mercedes-Benz

					32	265108					265108: M159.980
					16	265150					
215160					16	265150					215160: M111.979, (ELV)
215161											215161: M111.979, (ALV)
215115					16	265140					225114:(ELV); 215115:(ELV)
215113					8	265118					
					8	265118					
					20	265140					
215114					10	265118					
	16	235107			16	265109					235107: 31216220→; 265109: →31216219
					16	265165					265165: 31216220→
	24	235117			24	265165					
	16	235106			16	265110					
					16	265140					
	24	235118			24	265165					
					16	265140					
	24	235118			24	265165					
					8	265118					
					16	265150					
215160					16	265150					215160: M111.979, (ELV)
215161											215161: M111.979, (ALV)
	16	235106			16	265110					
215115					16	265140					225114:(ELV); 215115:(ELV)
215113					8	265118					
					8	265118					
					20	265140					
215114					10	265118					
	16	235107			16	265109					235107: 31216220→; 265109: →31216219
					16	265165					265165: 31216220→
	24	235117			24	265165					235117: M272.979; 265165: M272.979
	16	235106			16	265110					
					16	265140					
	24	235118			24	265165					
					16	265140					
	24	235118			24	265165					
	24	235117			24	265165					
	16	235106			16	265110					
					16	265140					
	24	235118			24	265165					
215160					16	265150					215160: M111.979, (ELV)
215161											215161: M111.979, (ALV)
215115					16	265140					225114:(ELV); 215115:(ELV)
215113					8	265118					
					20	265140					
215114					10	265118					
	16	235107			16	265109					235107: 31216220→; 265109: →31216219
					16	265165					265165: 31216220→
	24	235117			24	265165					
	16	235106			16	265110					
					16	265140					
	24	235118			24	265165					

		cm³			
SPRINTER 5-T (906)					
513 CDI; 515 CDI	OM646.986; (95kW-110kW)	2148	06.06-		
518 CDI; 519 CDI	OM642.992; (135kW-140kW)	2987	06.06-		
T1 (601)					
210 2.3	M102.945; (77kW)	2298	05.89-02.96		
208 D 2.3	OM601.940; (58kW-60kW)	2299	10.88-02.96		
210 D 2.8; 210 D 2.9	OM602.940; (70kW-72kW)	2874	10.88-02.96		
T1 (602)					
308 D 2.3	OM601.940; (58kW-60kW)	2299	11.88-02.96		
210 D 2.9; 310 D 2.9	OM602.940; (70kW-72kW)	2874	06.89-02.96		
VANEO (414)					
1.6; 1.9	M166.961; M166.991; (60kW-92kW)	1598-1898	02.02-		
1.7 CDI	OM668.914; (55kW-67kW)	1689	02.02-		
VIANO (W639)					
3.0; 3.2	M112.951; (140kW-160kW)	3199	09.03-		
3.5 126	M272.979; (190kW)	3498	09.07-		
3.5	M112.976; (170kW)	3724	06.04-		
2.0 CDI; 2.2 Cdi; CDI 2.0 4-matic; CDI 2.2 4-matic	OM646.982; (80kW-110kW)	2148	09.03-		
3.0 CDI	OM642.990; (150kW)	2987	03.06-		
VITO (638)					
113 2.0; 114 2.3	M111.948; M111.950; M111.978; M111.980; (95kW-105kW)	1998-2295	02.96-07.03		
108 CDI 2.2; 110 CDI 2.2; 112 CDI 2.2	OM611.980; OM611A; OM611LA; (60kW-90kW)	2148-2151	03.99-07.03	225114	
108 D 2.3; 110 D 2.3; 110 TD 2.3	OM601.942; OM601.970; (58kW-72kW)	2299	02.96-07.03	225113	
VITO (W639)					
3.0; 3.2	M112.951; (140kW-160kW)	3199	09.03-		
126	M272.978; (190kW)	3498	09.07-		
123	M112.976; (170kW)	3724	06.04-		
109 CDI 2.2; 111 CDI 2.2; 115 CDI 2.2; 2.0 CDI; 2.2 CDi	OM646.981; OM646.982; OM646.983; (65kW-110kW)	2148	09.03-		
120 CDI	OM642.990; (150kW)	2987	09.07-		
V-KLASSE/CLASS (638/2)					
V 200; V 230	M111.948; M111.950; M111.978; M111.980; (95kW-105kW)	1998-2295	10.96-07.03		
V 200 CDI; V 220 CDI	OM611.980; (75kW-90kW)	2151	03.99-07.03	225114	
V 230 TD	OM601.970; (72kW)	2299	09.96-07.03	225113	

Mini

MINI (R56)					
One	(55kW)	1397	03.09-		
One	(70kW)	1397	03.07-		
Cooper	N12B16A; (88kW)	1598	10.06-		
Cooper S; John Cooper Works	(128kW-155kW)	1598	10.06-		
Cooper D	9HZ; (80kW)	1560	03.07-		
MINI (R57)					
1.6 Cooper	(88kW)	1598	03.09-		

RUVILLE YOUR PARTNER

Mercedes-Benz → Mini

					16	265140					
	24	235118			24	265165					
	8	245104			8	265113					
					8	265118					
					10	265118					
					8	265118					
					10	265118					
					8	265102					
	16	235102			16	265106					
	16	235100 [6]									
	6	245110 [6]			12	265102					245110:(ELV); 265102:(ELV)
	6	245111 [6]			6	265104					245111:(ELV); 265104:(ALV)
	6	245112 [6]									245112:(ALV)
	24	235117			24	265165					235117: M272.978; 265165: M272.978
	6	245110 [6]			12	265102					245110:(ELV); 265102:(ELV)
	6	245111 [6]			6	265104					245111:(ELV); 265104:(ALV)
	6	245112 [6]									245112:(ALV)
					16	265140					
	24	235118			24	265165					
215160					16	265150					215160:(ELV)
215161											215161:(ALV)
215115					16	265140					225114:(ELV); 215115:(ELV)
215113					8	265118					
	6	245110 [6]			12	265102					245110:(ELV); 265102:(ELV)
	6	245111 [6]			6	265104					245111:(ELV); 265104:(ALV)
	6	245112 [6]									245112:(ALV)
	24	235117			24	265165					
	6	245110 [6]			12	265102					245110: M112.976, (ELV); 265102: M112.976, (ELV)
	6	245111 [6]			6	265104					245111: M112.976, (ELV); 265104: M112.976, (ALV)
	6	245112 [6]									245112: M112.976, (ALV)
					16	265140					
	24	235118			24	265165					
215160					16	265150					215160:(ELV)
215161											215161:(ALV)
215115					16	265140					225114:(ELV); 215115:(ELV)
215113					8	265118					

		235006 [7]			8	265008					235006:(ELV); 265008:(ALV)
		235007 [7]			8	265009					235007:(ELV); 265009:(ELV)
		235008 [7]									235008:(ELV)
		235009 [7]									235009:(ELV)
		235010 [7]									235010:(ELV)
	8	235012									235012:(ALV)
		235006 [7]			8	265008					265008:(ALV)
		235007 [7]			8	265009					265009:(ELV)
		235008 [7]									
		235009 [7]									
		235010 [7]									
		235006 [7]			8	265008					235006:(ELV); 265008:(ALV)
		235007 [7]			8	265009					235007:(ELV); 265009:(ELV)
		235008 [7]									235008:(ELV)
		235009 [7]									235009:(ELV)
		235010 [7]									235010:(ELV)
	8	235012									235012:(ALV)
	16	235012			16	265008					
	16	235207			16	268400					
		235006 [7]			8	265008					235006:(ELV); 265008:(ALV)
		235007 [7]			8	265009					235007:(ELV); 265009:(ELV)
		235008 [7]									235008:(ELV)
		235009 [7]									235009:(ELV)

6 siehe Klappseite vorn • see fold in front. 7 siehe Seite 269 • see page 269

		cm³			
Mini					
MINI (R57)					
1.6 Cooper	(88kW)	1598	03.09-		
1.6 Cooper S; John Cooper Works	(128kW-155kW)	1598	03.08-		
MINI CLUBMAN (R55)					
1.6	N12B16A; (88kW)	1598	10.07-		
1.6; John Cooper Works	(128kW-155kW)	1598	10.07-		
1.6 D	9HZ; (80kW)	1560	10.07-		
Mitsubishi					
CARISMA (DA_)					
1.8; 1.8 16V; 1.8 16V GDI; 1.8 GDI	4G93; (85kW-103kW)	1834	07.95-06.06		
COLT VI (CZC)					
1.5	OM639; (50kW-70kW)	1493	08.04-		
GALANT II (A16_)					
2.3 Turbo-D (A167); 2.3 Turbo-D (A167V)	4D55T; (62kW)	2347	09.80-05.84		
GALANT V (E5_A,E7_A,E8_A)					
2.0 GLSTD (E57A)	4D68T; (66kW)	1998	11.92-08.96		
L 200 (K_4T)					
2.5 D	4D56; (51kW)	2476	11.86-08.96		
2.5 D	4D56; (51kW)	2476	12.87-05.93		
2.5 TD	4D56T; (64kW)	2477	11.92-08.96		
L 300 (L03_P/G,L0_2P)					
2.5 D	4D56; (51kW)	2477	11.86-04.94		
L 300 (P0_W,P1_W,P2_W)					
2.5 D	4D56; (51kW)	2477	11.86-		
L 300 (P1_T)					
2.5 D	4D56T; (64kW)	2477	11.94-		
LANCER (CS_A,CS_W)					
2.0	4G63; (99kW)	1997	09.03-		
LANCER V (CB/D_A,CB_W,CD_W)					
2.0 D; 2.0 GLX D	4D68; (50kW)	1998	06.92-		
OUTLANDER					
2.0; 2.0 TURBO	4G63; (93kW-177kW)	1997	05.03-		
PAJERO (H6_W, H7_W)					
1.8 GDI	4G93; (88kW)	1834	10.99-		
2.0 GDI	4G94; (95kW)	1999	10.00-		
PAJERO CLASSIC (V2_W)					
2.5 TD	(85kW)	2477	07.02-		
PAJERO I (L04_G,L14_G)					
2.3 TD	4D55T; (62kW)	2347	12.82-04.86		
2.5 TD	4D56T; (62kW)	2477	05.86-10.89		
PAJERO II (V2_W,V4_W)					
3.0 V6	6G72; (110kW)	2972	12.90-12.95		
3.0 V6 24V	6G72; (130kW)	2972	06.97-04.00		
3.0 V6 24V	6G72; (133kW)	2972	06.94-04.00		
3.5 V6 24V	(143kW)	3497	07.97-04.00		
3.5 V6 24V	6G74DOHC; (153kW)	3497	06.94-04.00		
2.5 TD	4D56TD; (73kW)	2477	12.90-04.00		
PAJERO SPORT (K90)					
3.0 V6	6G72; (125kW)	2972	06.00-		
3.0 V6	6G72; (130kW)	2972	11.98-		
2.5 TD	4D56T; (73kW-85kW)	2477	11.98-		
SPACE STAR (DG0)					
1.8 GDI	4G93; (87kW-90kW)	1834	06.98-		
Nissan					
100 NX (B13)					
1.6	GA16DS; (66kW)	1597	03.90-10.94		
1.6 SR	GA16DE; (75kW)	1597	09.93-10.94		

RUVILLE YOUR PARTNER

Mini → Nissan

		235010 [7]									235010:(ELV)
	8	235012									235012:(ALV)
	16	235012			16	265008					
		235006 [7]			8	265008					235006:(ELV); 265008:(ALV)
		235007 [7]			8	265009					235007:(ELV); 265009:(ELV)
		235008 [7]									235008:(ELV)
		235009 [7]									235009:(ELV)
		235010 [7]									235010:(ELV)
	8	235012									235012:(ALV)
	16	235012			16	265008					
	16	235207			16	268400					

					16	267300					
	12	235118			12	265165					
217301											
217302											
217301											217301:→10.88
217303											217303:04.95→
217301											217301:→10.88
217303											217303:06.94→
217301											217301:→10.88
217301											217301:→10.88
217303											217303:07.94→, →08.97
217303											
					16	267302					
217302											
					16	267302					
					16	267300					267300:→06.00
					16	267300					
217303											
217301											
217301											217301:→10.88
					12	267303					267303:→05.94
					24	267303					267303:→02.00
					24	267303					
					24	267303					267303:→02.00
					24	267302					267302:→05.97
					24	267303					267303:06.97→, →02.00
217303											217303:06.94→
					24	267303					
					24	267303					267303:→02.00
217303											
					16	267300					267300:→08.02

216800					16	266803					216800:(ALV), →10.92; 266803:10.90→, →10.92, (Unisia)
216800					16	266803					216800:(ALV); 266803:(Unisia)

7 siehe Seite 269 • see page 269

		cm³			
Nissan					
300 ZX (Z31)					
3.0; 3.0 TURBO	VG30E; VG30ET; VG30T; (125kW-168kW)	2960	01.84-10.90		
300 ZX (Z32)					
3.0 TWIN TURBO	VG30DETT; (197kW-208kW)	2960	05.90-09.95		
ALMERA I (N15)					
1.4; 1.4 GX,LX; 1.4 S,GX,LX	GA14DE; (55kW-64kW)	1392	09.95-07.00		
1.6; 1.6 SLX; 1.6 SR,SLX	GA16DE; (66kW-73kW)	1597	09.95-07.00		
2.0 GTi	SR20DE; (105kW)	1998	07.96-03.00		
ALMERA II (N16)					
1.5; 1.8	QG15DE; QG18DE; (66kW-84kW)	1498-1769	01.00-		
2.2 D	YD22DDT; (81kW)	2184	03.00-		
2.2 dCi	YD22DDT; YD22DDTI; (82kW-100kW)	2184	09.03-		
ALMERA TINO (V10)					
1.8 16V	QG18DE; (84kW)	1769	08.00-		
MICRA (K11)					
1.0i 16V; 1.3i 16V	CG10DE; CG13DE; (40kW-55kW)	998-1275	08.92-02.03		
NAVARA					
2.5 dCi	YD25DDTI; (106kW-128kW)	2488	07.05-		
PATHFINDER					
3.3 V6	VG33E; (110kW-125kW)	3275	09.97-12.04		
2.5 dCi	(126kW-128kW)	2488	03.05-		
PATROL GR I (Y60)					
4.2 D	(85kW)	4169	11.88-06.97		
PICK-UP (D21)					
2.4i 12V	KA24E; (91kW-93kW)	2389	04.92-02.98		
2.5 D	TD25; (59kW)	2494	08.87-02.98		
2.5 D	TD25; (61kW)	2494	03.96-02.98		
PICK-UP (D22)					
2.4i	KA24E; (88kW)	2389	02.98-		
2.5 Di	YD25DDTI; (98kW)	2488	03.02-		
2.5 D; 2.5 TD	TD25; TD25TI; (61kW-76kW)	2494	02.98-		
PRIMASTAR					
2.0	F4R720; F4R722; (88kW)	1998	03.01-		
PRIMERA (P10,W10)					
1.6; 1.6i	GA16DS; (66kW)	1597	06.90-03.98		
1.6i	GA16DE; (75kW)	1597	03.94-03.98		
PRIMERA (P11,WP11)					
1.6 16V	GA16DE; (66kW-73kW)	1597	09.96-07.02		
1.8 16V	QG18DE; (84kW)	1769	08.99-07.02		
2.0 16V	SR20DE; (85kW)	1998	09.96-07.02		
2.0 16V	SR20DE; (96kW-110kW)	1998	09.96-07.02		
QASHQAI					
2.0 dCi	M1D; M9R; (110kW)	1995	02.07-		
SERENA					
1.6 16V	GA16DE; (71kW)	1597	02.93-		
SUNNY III (N14,Y10)					
1.4 16V	GA14DE; GA14DS; (55kW)	1392	10.90-05.95		
1.6 16V; 1.6i 16V	GA16DE; GA16DEL; GA16DS; (66kW-75kW)	1597	10.90-03.00		
TERRANO I (WD21)					
3.0i	VG30E; (109kW)	2960	01.90-12.95		
2.7 TD	TD27T; (73kW)	2664	02.89-02.96		
TERRANO II (R20)					
2.4; 2.4i 12V	KA24E; (85kW-91kW)	2389	02.93-		

RUVILLE YOUR PARTNER

Nissan

					12	266802					
					24	266804					
216801					16	266803					216801:(ELV); 266803:(Unisia)
216800					16	266803					216800:(ALV); 266803:(Unisia)
216801											216801:(ELV)
216802											216802:(ALV)
					16	266801					266801:{GB}
					16	266803					266803:→03.01, (Unisia), {J}
					16	266809					266809:12.00→, →03.01
					16	266809					
					16	266801					
					16	266801					
					16	266809					266809: YD25DDTI
					12	266802					266802:→07.00
					16	266809					
					12	266807					266807:10.91→
	4	246800 [6]									246800:(ELV), (ST), 06.95→
	4	246801 [6]									246801:(ELV), (GS), 06.95→
	2	246802 [6]									246802:(ALV), (Zyl.1), (Zyl.3), 06.95→
	2	246803 [6]									246803:(ALV), (Zyl.2), (Zyl.4), 06.95→
					8	266807					266807:→05.94
					8	266808					266808:06.94→
					8	266808					
	4	246800 [6]									246800:(ELV), (ST), →11.01
	4	246801 [6]									246801:(ELV), (GS), →11.01
	2	246802 [6]									246802:(ALV), (Zyl.1), (Zyl.3), →11.01
	2	246803 [6]									246803:(ALV), (Zyl.2), (Zyl.4), →11.01
					16	266809					
					8	266808					266808:→11.01
	16	235501			16	265503					
	16	235500 [6]									
216800					16	266801					216800:(ALV), →04.93; 266801:05.93→
					16	266803					266803:→04.93
216800					16	266803					216800:(ALV)
216801											216801:(ELV)
216800					16	266801					216800:(ALV), 09.99→
216801											216801:(ELV), 09.99→
					16	266801					
216802											216802:(ALV)
216802											216802:(ALV)
216803											216803:(ELV)
	16	235502			16	265165					
					16	266801					266801:06.93→
					16	266803					266803:→05.93
216800					16	266803					216800: GA14DS, (ALV); 266803:10.92→, (Atsugi)
					16	266803					
					12	266802					
					8	266807					266807:→10.93
	4	246800 [6]									246800:(ELV), (ST)
	4	246801 [6]									246801:(ELV), (GS)

6 siehe Klappseite vorn • see fold in front.

		cm³			
Nissan					
TERRANO II (R20)					
2.4; 2.4i 12V	KA24E; (85kW-91kW)	2389	02.93-		
2.7 TD; 2.7 TDi	TD27T; TD27TI; (74kW-92kW)	2664	02.93-		
URVAN (E24)					
2.3 D	TD23; (51kW)	2289	01.88-05.97		
2.5 D	TD25; (59kW)	2494	12.88-05.97		
VANETTE CARGO (HC23)					
1.6i	GA16DE; (71kW-72kW)	1597	01.95-		
X-TRAIL (T30)					
2.2 D; 2.2 dCi	YD22DDTI; YD22ETI; (84kW-100kW)	2184	07.01-		
X-TRAIL (T31)					
2.0 dCi	M9R760; (110kW-127kW)	1995	06.07-		
Opel					
AGILA					
1.0; 1.0i 12V	Z10XE; Z10XEP; (43kW-44kW)	973-998	09.00-		
1.2 16V Twinport; 1.2i 16V	Z12XE; Z12XEP; (55kW-59kW)	1199-1229	09.00-		
1.3 CDTI	Z13DT; Z13DTJ; (51kW-55kW)	1248	08.03-		
ANTARA					
2.4	Z24XE; (103kW)	2405	09.08-		
2.4	Z24XED; (104kW)	2405	05.06-		
3.2 V6	10HM; Z32SEE; (167kW)	3195	03.07-		
2.0 CDTI	Z20DM; Z20DMH; Z20S; (93kW-110kW)	1991	05.06-		
ASCONA A					
1.6 N; 1.6 S	16N; 16S; (44kW-59kW)	1584	10.70-08.75		
ASCONA B					
1.3 N	13N; (44kW)	1297	03.79-08.81		
1.3 S	13S; (55kW)	1297	08.79-08.81	225306	225304
1.6 N; 1.6 S	16N; 16S; (44kW-55kW)	1584	09.75-08.81		
2.0 N; 2.0 S	20N; 20S; (66kW-74kW)	1979	08.77-08.81		
ASCONA C					
1.3 N; 1.3 S	13N; 13S; (44kW-55kW)	1297	09.81-08.88	225306	225304
1.6	16N; (55kW)	1598	09.81-08.88	225313	225311
1.6; 1.6i	16SV; C16LZ; C16NZ; E16NZ; (55kW-60kW)	1598	09.86-08.88	225319	225317
1.6 S	16SH; (66kW)	1598	09.81-08.86	225313	225311
1.8	E18NV; (62kW)	1796	09.87-08.88		
1.8 E; 1.8i	18E; C18NE; S18NV; (74kW-85kW)	1796	09.82-08.86	225334	
2.0i	20NE; C20NE; (85kW)	1998	09.86-08.88	225362	225360
2.0i GT	20SEH; (95kW)	1998	03.87-08.88		
1.6 D	16D; 16DA; (40kW)	1598	03.82-08.88	225329 225342	225328 225340
ASTRA F					
1.4 Comfort	Z14XEP; (66kW)	1364	09.03-01.05		
1.4i	C14NZ; (44kW)	1389	09.91-01.99	225351	225350
1.4i	X14NZ; (44kW)	1389	01.98-01.05		
1.4	14NV; (55kW)	1389	09.91-09.93	225322	225320
1.4; 1.4i; 1.4i S	14SE; C14SE; (60kW)	1389	03.92-03.01	225353 225356	225352 225355
1.4i 16V	X14XE; (66kW)	1389	01.96-03.01		
1.6i; 1.6i Eco	X16SZ; (52kW)	1598	02.93-08.96		
1.6i	C16NZ; X16SZR; (55kW)	1598	09.91-01.98	225319	225317

RUVILLE YOUR PARTNER

Nissan → Opel

	2	246802 [6]									246802:(ALV), (Zyl.1), (Zyl.3)
	2	246803 [6]									246803:(ALV), (Zyl.2), (Zyl.4)
					8	266808					
					8	266807					266807:→12.88
					8	266807					266807:→11.95
					8	266808					266808:11.95→
					16	266801					
					16	266809					
	16	235502			16	265165					

215321	12	235356			12	265301					215321:(ALV)
	12	235300									
	16	235356			16	265301					
	16	235300 [6]									
	16	235809			16	265809					
					16	265302					
215310					16	265302					215310:(ELV)
215311											215311:(ALV)
	24	235301									
	4	235303									235303:(ELV)
	4	235304									235304:(ALV)
					8	265306					
	8	235340			8	265306	8	275307	1	295310(N)	
215320	8	235340			8	265306	8	275307	1	295310(N)	
					8	265306					
215325											
215320	8	235340			8	265306	8	275307	1	295310(N)	
215330	8	235340			8	265306	8	275307	1	295310(N)	
215315	8	235340			8	265306	8	275307	1	295310(N)	
215330	8	235340			8	265306	8	275307	1	295310(N)	
215399	8	235340			8	265306	8	275307		[3]	
215318	8	235340			8	265306	8	275307	1	295310(N)	
215323	8	235340			8	265306	8	275307		[3]	
	8	235340			8	265306	8	275307		[3]	
215340	8	235320			8	265306	8	275307	1	295310(N)	225329: 16DA, (A.T.), 14503757→; 225328: 16DA, (A.T.), 14503757→; 215340: 16D
215360											225329: 16DA, (M.T.), 14498631→; 225328: 16DA, (M.T.), 14498631→; 215340: 16DA, (A.T.), →14503756
											225342: 16D; 225340: 16D; 215340: 16DA, (M.T.), →14498630
											225342: 16DA, (A.T.), →14503756; 225340: 16DA, (A.T.), →14503756; 215360: 16DA, (A.T.), 14503757→
											225342: 16DA, (M.T.), →14498630; 225340: 16DA, (M.T.), →14498630; 215360: 16DA, (M.T.), 14498631→
	16	235356			16	265301					
	16	235300 [6]									
215354	8	235340			8	265306	8	275307	1	295310(N)	
					8	265306					
215313	8	235340			8	265306	8	275307	1	295310(N)	
215352	8	235340			8	265306	8	275307	1	295310(N)	225353: →02T14053; 225352: →02T14053; 215352: →02T14053
215355											225356: 02T14054→; 225355: 02T14054→; 215355: 02T14054→
215304					16	265302			2	295310(N)	215304:(ALV)
215314											215314:(ELV)
215303	8	235320			8	265306			1	295310(N)	
215306	8	235340			8	265306	8	275307	1	295310(N)	225319: C16NZ; 225317: C16NZ; 215306: X16SZR; 275307: C16NZ
215315											215315: C16NZ

3, 6 siehe Klappseite vorn • see fold in front.

RUVILLE
YOUR PARTNER

Opel

		cm³			
ASTRA F					
1.6i	C16NZ; (55kW)	1598	10.91-08.94	225319	225317
1.6	16LZ2; 16NZR; (55kW)	1598	09.95-09.98		
1.6i	X16SZR; (55kW)	1598	01.96-01.05		
1.6 Si; 1.6i	C16SE; (74kW)	1598	03.92-12.94		
1.6i 16V	X16XEL; (74kW)	1598	08.94-01.05		
1.8i	C18NZ; (66kW)	1796	09.91-09.98	225362	225360
1.8	Z18XEL; (81kW)	1796	02.03-07.04		
1.8i 16V	C18XEL; X18XE; (85kW)	1799	07.94-03.01		
1.8i 16V	C18XE; (92kW)	1799	06.93-01.98		
2.0i	C20NE; (85kW)	1998	09.91-09.98	225362	225360
2.0i 16V	X20XEV; (100kW)	1998	02.95-09.98		
2.0 GSi 16V; 2.0i 16V	C20XE; (110kW)	1998	09.91-01.98		
1.7 TDS	17DT; X17DT; (60kW)	1686	12.91-09.98	225301	
1.7 D; 1.7 TD	17D; 17DR; X17DTL; (42kW-50kW)	1700	12.91-01.99	225329	225328
ASTRA G					
1.2 16V; 1.4	X12XE; Z12XE; Z14XEP; (48kW-66kW)	1199-1364	02.98-01.05		
1.4 16V	X14XE; Z14XE; (66kW)	1389	02.98-01.05		
1.6	X16SZR; (55kW)	1598	02.98-09.00		
1.6	Z16SE; (62kW)	1598	09.00-04.05		
1.6 CNG	Z16YNG; (71kW)	1598	03.03-07.04		
1.6 16V	X16XEL; Z16XE; (74kW)	1598	02.98-10.05		
1.8	Z18XEL; (81kW)	1796	02.03-01.05		
1.8 16V	X18XE1; (85kW)	1796	02.98-10.00		
1.8 16V	Z18XE; (92kW)	1796	09.00-10.05		
2.0 16V	X20XEV; (100kW)	1998	02.98-01.05		
2.0 16V OPC; 2.0 16V TURBO; 2.0 OPC	X20XER; Z20LER; Z20LET; (118kW-147kW)	1998	11.99-10.05		
2.2 16V	Z22SE; (108kW)	2198	09.00-10.05		
1.7 CDTI; 1.7 DTI 16V Eco4	Y17DT; Z17DTL; (55kW-59kW)	1686	02.00-01.05	225303	
1.7 TD	X17DTL; (50kW)	1700	02.98-04.05	225329	225328
2.0 DI	X20DTL; Y20DTL; (60kW)	1995	02.98-04.05	225305	
2.0 DTI 16V	X20DTH; Y20DTH; (74kW)	1995	08.99-01.05	225305	
2.2 DTI	Y22DTR; (92kW)	2172	09.02-10.05	225305	
ASTRA H					
1.2; 1.4	Z12XEP; Z14XEL; Z14XEP; (59kW-66kW)	1229-1364	03.04-		
1.6 CNG	Z16YNG; (69kW)	1598	11.05-		
1.8	Z18XE; (92kW)	1796	03.04-		
2.0 TURBO	Z20LEH; Z20LEL; Z20LER; (125kW-177kW)	1998	03.04-		
1.3 CDTI	Z13DTH; (66kW)	1248	08.05-		
1.7 CDTI	Z17DTH; Z17DTL; (59kW-74kW)	1686	03.04-	225303	
1.9 CDTI	Z19DT; (74kW-88kW)	1910	06.04-		
1.9 CDTI	Z19DTH; Z19DTJ; (88kW-110kW)	1910	04.04-		
ASTRA H GTC					
1.2; 1.4	Z12XEP; Z14XEP; (59kW-66kW)	1229-1364	03.05-		
1.6 CNG	Z16YNG; (69kW)	1598	11.05-		
1.8	Z18XE; (92kW)	1796	03.05-		
2.0 TURBO	Z20LEH; Z20LEL; Z20LER; (125kW-177kW)	1998	03.05-		
1.3 CDTI	Z13DTH; (66kW)	1248	04.05-		
1.7 CDTI	Z17DTL; (59kW)	1686	03.05-		
1.7 CDTi	Z17DTH; (74kW)	1686	03.05-	225303	
1.9 CDTI	Z19DT; Z19DTL; (74kW-88kW)	1910	09.05-		

RUVILLE YOUR PARTNER

Opel

215315	8	235340			8	265306	8	275307	1	295310(N)	225319: C16NZ; 225317: C16NZ; 215315: C16NZ; 275307: C16NZ
					8	265306					
215306					8	265306			1	295310(N)	215306: X16SZR
	8	235340			8	265306	8	275307	1	295310(N)	
215304					16	265302			2	295310(N)	215304:(ALV)
215314											215314:(ELV)
215323	8	235340			8	265306	8	275307		[3]	
					16	265302					265302: Z18XEL
215310					16	265302			2	295310(N)	215310:(ELV)
215311											215311:(ALV)
215310					16	265302			1	295310(N)	215310:(ELV)
215311											215311:(ALV)
215323	8	235340			8	265306	8	275307		[3]	
215310					16	265302			2	295310(N)	215310:(ELV)
215311											215311:(ALV)
215333					16	265302			2	295310(N)	215333:(ELV); 265302: →14137011
215334					16	265312					215334:(ALV), →14137011; 265312: 14137012→
215302											
215360	8	235320			8	265306	8	275307	1	295310(N)	
	16	235356			16	265301					
	16	235300 [6]									
215304					16	265302			2	295310(N)	215304:(ALV); 295310(N): X14XE
215314											215314:(ELV)
215306					8	265306			1	295310(N)	215306: →02HVI800
215307											215307: 02HV1801→
215307					8	265306					
215304					16	265302					215304:(ALV)
215304					16	265302			2	295310(N)	215304:(ALV), Z16XE
215314											215314:(ELV)
215336					16	265302					215336:(ELV)
215337											215337:(ALV)
215304					16	265302					215304:(ALV)
215336					16	265302					215336:(ELV)
215337											215337:(ALV)
					16	265302			2	295310(N)	
					16	265302					
					16	265330					
215308					16	265307					215308:(ALV)
215309											215309:(ELV)
215360	8	235320			8	265306	8	275307	1	295310(N)	
215305					16	265302					
215305					16	265302					225305: Y20DTH; 265302: Y20DTH
215305					16	265302					
	16	235356			16	265301					
	16	235300 [6]									
215304					16	265302					215304:(ALV)
215336					16	265302					215336:(ELV)
215337											215337:(ALV)
					16	265302					
	16	235809			16	265809					
215308					16	265307					215308:(ALV)
215309											215309:(ELV)
					8	265802					
	16	235302			16	265809					235302: 17180895→
	16	235807									235807: →17180894
											235807: 04654871→
	16	235356			16	265301					
	16	235300 [6]									
215304					16	265302					215304:(ALV)
215336					16	265302					215336:(ELV)
215337											215337:(ALV)
					16	265302					
	16	235809			16	265809					
215308					16	265307					215308:(ALV)
215309											215309:(ELV)
215308					16	265307					215308:(ALV)
215309											215309:(ELV)
					8	265802					

3, 6 siehe Klappseite vorn • see fold in front.

		cm³			
Opel					
ASTRA H GTC					
1.9 CDTi	Z19DTH; Z19DTJ; (88kW-110kW)	1910	03.05-		
ASTRA J					
1.4 ecoFLEX; 1.4 Turbo	(64kW-103kW)	1364-1398	12.09-		
1.3 CDTI ecoFLEX	A13DTE; (70kW)	1248	12.09-		
2.0 CDTI	A20DTH; (118kW)	1956	12.09-		
CALIBRA A					
2.0i	C20NE; (85kW)	1998	06.90-07.97	225362	225360
2.0i 16V	X20XEV; (100kW)	1998	02.94-07.97		
2.0i 16V	C20XE; (110kW)	1998	06.90-02.94		
2.0i TURBO	C20LET; (150kW)	1998	03.92-07.97		
2.5i V6	C25XE; X25XE; (125kW)	2498	04.93-07.97		
COMBO					
1.2	C12NZ; X12SZ; (33kW)	1195	07.94-10.01	225398	225395
1.4; 1.4 16V	Z14XEP; (66kW)	1364	10.04-		
1.4i	C14NZ; X14SZ; (44kW)	1389	07.94-10.01	225351	225350
1.4	C14SE; (60kW)	1389	07.94-10.01	225353 225356	225352 225355
1.4 16V	X14XE; (66kW)	1389	08.99-10.01		
1.6	Z16SE; (62kW-64kW)	1598	08.01-		
1.6 16V	Z16YNG; (69kW)	1598	06.06-		
1.6 CNG	Z16YNG; (71kW)	1598	04.05-		
1.3 CDTI 16V	Y13DT; Z13DT; Z13DTJ; (51kW-55kW)	1248	10.04-		
1.7 D	17D; X17D; (44kW)	1686	07.94-10.01		
1.7 CDTI 16V; 1.7 DI 16V; 1.7 DTI 16V	Y17DT; Y17DTL; Z17DTH; (48kW-74kW)	1686	10.01-	225303	
COMMODORE B					
2.8 GS/E	28E; 28EC; (118kW)	2784	07.72-02.75		
CORSA A					
1.2i	C12NZ; (33kW)	1195	09.89-03.93	225398	225395
1.2; 1.2 N	12NC; E12GV; (33kW)	1196	09.82-08.90		
1.2 N	12NV; (38kW)	1196	01.90-03.93		
1.2; 1.2 S	12ST; (40kW)	1196	09.82-03.93	225302	225300
1.2; 1.2 S	12S; (43kW-44kW)	1196	09.82-08.90		
1.3; 1.3i	13NB; C13N; (44kW)	1297	09.85-09.90	225306 225319	225304 225317
1.3; 1.3 S	13SB; (51kW)	1297	09.82-10.89	225306	225304
1.4i	C14NZ; (44kW)	1389	10.89-03.93	225351	225350
1.4 S	14NV; (53kW)	1389	09.89-03.93	225322	225320
1.4i S	C14SE; (60kW)	1389	09.91-03.93	225353 225356	225352 225355
1.6 GSI	C16NZ; (55kW)	1598	08.88-09.92	225319	225317
1.6 GSi	C16SEI; (72kW)	1598	09.89-03.93		
1.6 GSi	E16SE; (74kW)	1598	05.88-03.92	225327	225325
1.6 GSi	C16SE; (74kW)	1598	02.92-03.93		
1.5 D; 1.5 TD	15D; 15DT; (37kW-49kW)	1488	06.87-03.93	225301	
CORSA B					
1.0i 12V	X10XE; (40kW)	973	11.96-09.00		
1.2i	12NZ; (33kW)	1195	03.93-09.00		
1.2i	C12NZ; X12SZ; (33kW)	1195	03.93-09.00	225398	225395
1.2i 16V	X12XE; (48kW)	1199	03.98-09.00		
1.4i	C14NZ; X14SZ; (44kW)	1389	03.93-09.00	225351	225350
1.4i	X14SZ; (44kW)	1389	08.99-09.00		

RUVILLE YOUR PARTNER

Opel

	16	235302			16	265809					235302: 17180895→
	16	235807									235807: →17180894
											235807: 04654871→
	16	235356			16	265301					
	16	235300 [6]									
	16	235809			16	265809					
	16	235302			16	265809					
215323	8	235340			8	265306	8	275307		[3]	
215310					16	265302			2	295310(N)	215310:(ELV)
215311											215311:(ALV)
215333					16	265302			2	295310(N)	215333:(ELV); 265302: →14137011
215334					16	265312					215334:(ALV), →14137011; 265312: 14137012→
					16	265312	16	275307	2	295310(N)	
					24	265302					
215312	8	235340			8	265306			1	295310(N)	225398: C12NZ; 225395: C12NZ; 215312: X12SZ
215398											215398: C12NZ
	16	235356			16	265301					
	16	235300 [6]									
215354	8	235340			8	265306	8	275307	1	295310(N)	225351: C14NZ; 225350: C14NZ; 215354: C14NZ; 295310(N): C14NZ; 275307: C14NZ
215352	8	235340			8	265306	8	275307	1	295310(N)	225353: →02T14053; 225352: →02T14053; 215352: →02T14053
215355											225356: 02T14054→; 225355: 02T14054→; 215355: 02T14054→
215304					16	265302					215304:(ALV)
215314											215314:(ELV)
215307	8	235320			8	265306					
215304					16	265302					215304:(ALV)
215304					16	265302					215304:(ALV)
	16	235809			16	265809					
215302					8	265306					215302: →574023
215308					16	265307					215308:(ALV)
215309											215309:(ELV)
215332											215332: 28E
215398	8	235340			8	265306			1	295310(N)	
	8	235340			8	265306	8	275307			235340: 12NC; 265306: 12NC; 275307: 12NC
215301					8	265306					
215301	8	235340			8	265306	8	275307	1	295310(N)	
215301	8	235320			8	265306					
215315	8	235340			8	265306	8	275307	1	295310(N)	225306: 13NB; 225304: 13NB; 215315: C13N
215320											225319: C13N; 225317: C13N; 215320: 13NB
215320	8	235340			8	265306	8	275307			
215354	8	235340			8	265306	8	275307	1	295310(N)	
215313	8	235340			8	265306	8	275307	1	295310(N)	
215352	8	235340			8	265306	8	275307	1	295310(N)	225353: →02T14053; 225352: →02T14053; 215352: →02T14053
215355											225356: 02T14054→; 225355: 02T14054→; 215355: 02T14054→
215315	8	235340			8	265306	8	275307	1	295310(N)	
					8	265306					
215316	8	235340			8	265306	8	275307			
	8	235340			8	265306	8	275307	1	295310(N)	
215302											
215321	12	235356			12	265301					215321:(ALV)
	12	235300									
215398					8	265306					
215312	8	235340			8	265306			1	295310(N)	225398: C12NZ; 225395: C12NZ; 215312: X12SZ
215398											215398: C12NZ
	16	235356			16	265301					
	16	235300 [6]									
215354	8	235320			8	265306	8	275307	1	295310(N)	225351: C14NZ; 225350: C14NZ; 215354: C14NZ; 295310(N): C14NZ; 275307: C14NZ
	8	235320			8	265306					

3, 6 siehe Klappseite vorn • see fold in front.

		cm³			
CORSA B					
1.4 S	C14SE; (60kW)	1389	03.93-09.00	225353 225356	225352 225355
1.4i 16V	C14SEL; (63kW)	1389	08.97-09.00		
1.4i 16V	X14XE; (66kW)	1389	09.94-09.00		
1.6	(71kW)	1598	08.05-		
1.6i 16V	C16SEL; (74kW)	1598	08.97-09.00		
1.6i 16V	X16XE; (78kW)	1598	09.94-09.00		
1.6 GSi 16V	C16XE; (80kW)	1598	03.93-09.00		
1.5 D; 1.5 TD; 1.7 D	15D; 15DT; 17D; X15DT; X17D; (37kW-49kW)	1488-1686	03.93-09.00	225301	
1.7 DTi	Y17DT; (55kW)	1686	08.01-		
CORSA C					
1.0	Z10XE; Z10XEP; (43kW-44kW)	973-998	09.00-		
1.2; 1.2 16V; 1.2 Twinport; 1.4; 1.4 Twinport	Z12XE; Z12XEP; Z14XEP; (55kW-66kW)	1199-1364	09.00-		
1.4	Z14XE; (66kW)	1389	09.00-		
1.6	(71kW)	1598	08.05-		
1.8 16V	Z18XE; (92kW)	1796	09.00-		
1.3 CDTI; 1.3 CDTI 16V	Z13DT; (51kW)	1248	06.03-		
1.7 CDTI; 1.7 DI 16V; 1.7 DTI; 1.7 DTI 16V; 1.7 SE	Y17DT; Y17DTL; Z17DTH; (48kW-74kW)	1686	09.00-	225303	
CORSA D					
1.0	Z10XEP; (44kW)	998	07.06-		
1.2; 1.2 ecoFLEX; 1.4; 1.4 ecoFLEX	Z12XEP; Z14XEP; (57kW-66kW)	1229-1364	07.06-		
1.3 CDTI	Z13DTH; Z13DTJ; (55kW-66kW)	1248	07.06-		
FRONTERA A					
2.0i	C20NE; X20SE; (85kW)	1998	03.92-10.98	225362	225360
2.2i	X22XE; (100kW)	2198	03.95-10.98		
2.4i	C24NE; (92kW)	2410	03.92-10.98		
FRONTERA B					
2.2i	X22SE; Y22SE; (100kW)	2198	10.98-		
2.2 DTI	X22DTH; Y22DTH; (85kW-88kW)	2171	10.98-	225305	
GT					
2.0	LNF; Z20NHH; (194kW)	1998	06.07-		
INSIGNIA					
2.0 Turbo	A20NHT; (162kW)	1998	07.08-		
2.8 V6 Turbo; 2.8 V6 Turbo 4x4 OPC	A28NER; A28NET; (191kW-239kW)	2792	07.08-		
2.0 Biturbo CDTI; 2.0 CDTI	A20DTC; A20DTH; A20DTJ; A20DTR; (81kW-140kW)	1956	07.08-		
KADETT D					
1.2	12N; (39kW)	1196	08.79-07.82		
1.2	12ST; (40kW)	1196	08.82-08.84	225302	225300
1.2 S	12S; (44kW)	1196	08.79-08.84		
1.3 N; 1.3 S	13N; 13S; (44kW-55kW)	1297	08.79-08.84	225306	225304
1.6 S	16SH; (66kW)	1598	09.81-08.84	225313	225311
1.8 GT/E	18E; (85kW)	1796	02.83-08.84	225334	
1.6 D	16D; (40kW)	1598	03.82-08.84	225329 225342	225328 225340
KADETT E					
1.2	12SC; (40kW)	1196	09.84-07.86	225302	225300
1.3 N	13N; 13NB; (44kW)	1297	09.84-08.91	225306	225304
1.3i	C13N; (44kW)	1297	09.85-08.91	225319	225317
1.3 S	13S; (55kW)	1297	09.84-02.93	225306	225304

RUVILLE YOUR PARTNER

Opel

215352	8	235340			8	265306	8	275307	1	295310(N)	225353: →02T14053; 225352: →02T14053; 215352: →02T14053
215355											225356: 02T14054→; 225355: 02T14054→; 215355: 02T14054→
215314					16	265302					215314:(ELV)
215304					16	265302			2	295310(N)	215304:(ALV)
215314											215314:(ELV)
					16	265302					
215314					16	265302					215314:(ELV)
215314					16	265302			2	295310(N)	
215314					16	265302					
215302											
					16	265307					
215321	12	235356			12	265301					215321:(ALV)
	12	235300									
	16	235356			16	265301					
	16	235300 [6]									
215304					16	265302					215304:(ALV)
215314											215314:(ELV)
					16	265302					
215336					16	265302					215336:(ELV)
215337											215337:(ALV)
	16	235809			16	265809					
215308					16	265307					215308:(ALV)
215309											215309:(ELV)
215321	12	235356			12	265301					215321:(ALV)
	12	235300									
	16	235356			16	265301					
	16	235300 [6]									
	16	235809			16	265809					
215323	8	235340			8	265306	8	275307		[3]	225362: C20NE; 225360: C20NE; 215323: C20NE; 295310(N): C20NE; 295340(N): C20NE; 275307: C20NE
									2	295310(N)	295310(N): X20SE
215310					16	265302			2	295310(N)	215310:(ELV)
215311											215311:(ALV)
215397											
215310					8	265302					215310: X22SE, (ELV), →YV699999
215311											215311: X22SE, (ALV), →YV699999
215305					16	265302					
					24	265330					
					16	265330					
	24	235301			24	265330					
	16	235302			16	265809					
	8	235340			8	265306	8	275307			
215301	8	235340			8	265306	8	275307	1	295310(N)	
					8	265306					
215320	8	235340			8	265306	8	275307	1	295310(N)	
215330	8	235340			8	265306	8	275307	1	295310(N)	
215318	8	235340			8	265306	8	275307	1	295310(N)	
215340	8	235320			8	265306	8	275307	1	295310(N)	225329: 16DA, (A.T.), 14503757→; 225328: 16DA, (A.T.), 14503757→; 215340: 16D
215360											225329: 16DA, (M.T.), 14498631→; 225328: 16DA, (M.T.), 14498631→; 215340: 16DA, (A.T.), →14503756
											225342: 16D; 225340: 16D; 215340: 16DA, (M.T.), →14498630
											225342: 16DA, (A.T.), →14503756; 225340: 16DA, (A.T.), →14503756; 215360: 16DA, (A.T.), 14503757→
											225342: 16DA, (M.T.), →14498630; 225340: 16DA, (M.T.), →14498630; 215360: 16DA, (M.T.), 14498631→
215301	8	235340			8	265306	8	275307	1	295310(N)	
215320	8	235340			8	265306	8	275307	1	295310(N)	
215315	8	235340			8	265306	8	275307	1	295310(N)	
215320	8	235340			8	265306	8	275307	1	295310(N)	

3, 6 siehe Klappseite vorn • see fold in front.

		cm³			
KADETT E					
1.4i	C14NZ; (44kW)	1389	01.90-07.94	225351	225350
1.4 S	14NV; (55kW)	1389	07.89-02.93	225322	225320
1.6i	C16LZ; C16NZ; E16NZ; (55kW)	1598	09.86-07.94	225319	225317
1.6; 1.6 S; 1.6i	16SV; (60kW)	1598	09.86-02.93	225319	225317
1.6 S	16SH; (66kW)	1598	09.84-08.86	225313	225311
1.8 S	E18NV; S18NV; (62kW)	1796	09.87-08.91		
1.8i	C18NT; (66kW)	1796	08.84-09.92	225334	
1.8i	C18NT; C18NZ; S18NV; (66kW)	1796	06.85-08.91	225334 225362	225360
1.8 E; 1.8 GSi; 1.8i	18E; C18NE; (74kW-85kW)	1796	09.84-08.86	225334	
1.8 S	E18NV; (62kW)	1798	09.87-08.91		
2.0 GSi; 2.0i	20NE; C20NE; (85kW)	1998	09.86-02.93	225362	225360
2.0 GSi	20SEH; (95kW)	1998	09.86-08.91		
2.0 GSi 16V	20XEJ; (110kW)	1998	03.88-08.91		
2.0 GSi 16V	C20XE; (110kW)	1998	03.88-08.91		
2.0 GSI 16V	20XE; (115kW)	1998	12.87-08.91		
1.6 D	16D; 16DA; (40kW)	1598	08.84-12.89	225329 225342	225328 225340
1.7 D	17D; 17DR; (42kW-44kW)	1700	08.88-07.94	225329	225328
MANTA B					
1.3 N	13N; (44kW)	1297	03.79-12.80		
1.3 S	13S; (55kW)	1297	08.79-08.86	225306	225304
1.8 S	18S; (66kW)	1796	07.82-08.87		
2.0; 2.0 S	20N; 20S; (66kW-74kW)	1979	08.77-08.84		
MERIVA					
1.4; 1.4 16V Twinport; 1.4 ecoFlex	Z14XEP; (66kW-103kW)	1364-1398	07.04-		
1.6	Z16SE; (64kW)	1598	05.03-		
1.6 16V	Z16XE; (74kW)	1598	05.03-		
1.6 TURBO	Z16LET; (132kW)	1598	09.05-		
1.8 16V	Z18XE; (92kW)	1796	05.03-		
1.3 CDTI	Y13DT; Z13DT; Z13DTJ; (51kW-55kW)	1248	09.03-		
1.7 CDTI; 1.7 DTI 16V	Y17DT; Z17DTH; (55kW-74kW)	1686	09.03-	225303	
MONZA A					
2.8; 3.0 GSE	28H; 30E; (103kW-132kW)	2784-2968	02.78-08.86		
MOVANO					
2.8 dTI	S9W702; (84kW)	2799	07.98-10.01		
OMEGA A					
1.8; 1.8 N	18NV; E18NVR; (60kW-65kW)	1796	09.86-03.94		
1.8; 1.8 S	18SEH; 18SV; (66kW-85kW)	1796	09.86-03.94	225362	225360
2.0; 2.0i	C20NEF; C20NEJ; (73kW-74kW)	1998	09.90-03.94		
2.0; 2.0i	20SE; C20NE; (85kW-90kW)	1998	09.86-03.94	225362	225360
2.4i	C24NE; (92kW)	2410	09.88-03.94		
3.0 24V; 3.0 24V (3000); 3.0 24V Evolution500; 3.6 24V Lotus	C30SE; C30SEJ; C30XEI; C36GET; (147kW-277kW)	2969-3638	09.89-03.94		
2.3 D	23YD; (54kW)	2260	09.86-03.94		
OMEGA B					
2.0	20SE; (85kW)	1998	03.94-12.00	225362	225360
2.0i	X20SE; (85kW)	1998	03.94-09.99		
2.0i 16V	X20XEV; (100kW)	1998	03.94-09.99		
2.2i	Y22XE; Z22XE; (106kW)	2198	09.99-07.03		
2.5i; 2.6 V6	X25XE; Y26SE; (125kW-132kW)	2498-2597	03.94-07.03		
3.0i MV6; 3.2 V6	X30XE; Y32SE; (155kW-160kW)	2962-3175	04.94-07.03		
2.0 DTI 16V; 2.2 DTI 16V	X20DTH; Y22DTH; (74kW-88kW)	1995-2171	09.97-07.03	225305	
2.5 TD	25DT; X25DT; X25TD; (96kW)	2497	04.94-07.03	225028	
2.5 DTI	Y25DT; (110kW)	2497	09.01-07.03		

RUVILLE YOUR PARTNER

Opel

215354	8	235340			8	265306	8	275307	1	295310(N)	
215313	8	235340			8	265306	8	275307	1	295310(N)	
215315	8	235340			8	265306	8	275307	1	295310(N)	
215315	8	235340			8	265306	8	275307	1	295310(N)	225319: →A027024;225317: →A027024;215315: →A027024
215330	8	235340			8	265306	8	275307	1	295310(N)	
215399	8	235340			8	265306	8	275307		[3]	
215318	8	235340			8	265306	8	275307	1	295310(N)	
215318	8	235340			8	265306	8	275307		[3]	225334: C18NT; 225360: C18NZ; 215318: C18NT; 295310(N): C18NT, C18NZ; 295340(N): C18NZ
215323											225362: C18NZ; 215323: C18NZ
215318	8	235340			8	265306	8	275307	1	295310(N)	
215399	8	235340			8	265306	8	275307		[3]	
215323	8	235340			8	265306	8	275307		[3]	
	8	235340			8	265306	8	275307		[3]	
					16	265302					
215333					16	265302			2	295310(N)	215333:(ELV); 265302: →14137011
215334					16	265312					215334:(ALV), →14137011; 265312: 14137012→
					16	265302					
215340	8	235320			8	265306	8	275307	1	295310(N)	225329: 16DA, (A.T.), 14503757→; 225328: 16DA, (A.T.), 14503757→; 215340: 16D
215360											225329: 16DA, (M.T.), 14498631→; 225328: 16DA, (M.T.), 14498631→; 215340: 16DA, (A.T.), →14503756
											225342: 16D; 225340: 16D; 215340: 16DA, (M.T.), →14498630
											225342: 16DA, (A.T.), →14503756; 225340: 16DA, (A.T.), →14503756; 215360: 16DA, (A.T.), 14503757→
											225342: 16DA, (M.T.), →14498630; 225340: 16DA, (M.T.), →14498630; 215360: 16DA, (M.T.), 14498631→
215360	8	235320			8	265306	8	275307	1	295310(N)	
					8	265306					
215320	8	235340			8	265306	8	275307	1	295310(N)	
	8	235340			8	265306	8	275307	1	295310(N)	
215325											
	16	235356			16	265301					
	16	235300 [6]									
215307	8	235320			8	265306					
215304					16	265302					215304:(ALV)
215314											215314:(ELV)
215314											215314:(ELV)
215336					16	265302					215336:(ELV)
215337											215337:(ALV)
	16	235809			16	265809					
215308					16	265307					215308:(ALV)
215309											215309:(ELV)
215332											
215801											
215399	8	235340			8	265306	8	275307		[3]	
215323	8	235340			8	265306	8	275307		[3]	
					8	265306					
215323	8	235340			8	265306	8	275307		[3]	
215397											
					24	265312					
215329											
215323	8	235340			8	265306	8	275307		[3]	
					8	265306			2	295310(N)	
215310					16	265302			2	295310(N)	215310:(ELV)
215311											215311:(ALV)
					16	265302					
215331					24	265302					215331:(ALV)
215335											215335:(ELV)
					24	265302					
215305					16	265302					
215025					12	265007					
	24	235003			24	265002					
	24	235000 [6]									

3, 6 siehe Klappseite vorn • see fold in front.

		cm³			
Opel					
REKORD D					
2.0; 2.0 S	20S; (74kW)	1979	09.75-08.77		
REKORD E					
1.8; 1.8 S	18N; 18S; (55kW-66kW)	1796	11.82-08.86		
1.8 E	C18NV; (74kW)	1796	05.85-08.86		
2.0; 2.0 S	20N; 20S; (66kW-74kW)	1979	08.77-08.86		
2.2 D	23D; (48kW-52kW)	2260	08.78-08.86		
SENATOR A					
2.8	28H; (103kW)	2784	02.78-04.81		
SENATOR B					
3.0 24V	C30SE; (150kW)	2969	09.89-09.93		
SIGNUM					
1.8	Z18XE; (90kW)	1796	05.03-		
2.0 TURBO; 2.2	Z20NET; Z22YH; (114kW-129kW)	1998-2198	05.03-		
2.8; 2.8 V6 TURBO	Z28NEL; Z28NET; (169kW-206kW)	2792	09.05-		
3.2 V6	Z32SE; (155kW)	3175	05.03-		
1.9 CDTI	Z19DT; (74kW-88kW)	1910	04.04-		
1.9 CDTI	Z19DTH; (110kW)	1910	04.04-		
2.0 DTI; 2.2 DTI	Y20DTH; Y22DTR; (74kW-92kW)	1994-2171	05.03-	225305	
SINTRA					
2.2i 16V	X22XE; (104kW)	2198	11.96-04.99		
3.0i 24V	X30XE; (148kW)	2962	11.96-04.99		
2.2 DTI	X22DTH; (85kW)	2171	07.97-04.99	225305	
SPEEDSTER					
2.0 TURBO	Z20LET; (147kW)	1998	04.03-		
2.2 16V	Z22SE; (108kW)	2198	09.00-		
TIGRA					
1.4	Z14XEP; (66kW)	1364	06.04-		
1.4 16V	X14XE; (63kW-66kW)	1389	07.94-12.00		
1.6 16V	C16SEL; (74kW)	1598	08.97-08.98		
1.6 16V	X16XE; (78kW)	1598	07.94-08.98		
1.8	Z18XE; (92kW)	1796	06.04-		
1.3 CDTI	Z13DT; (51kW)	1248	06.04-		
VECTRA A					
1.4	14NV; (55kW)	1389	04.88-06.92	225322	225320
1.6i	X16SZ; (52kW)	1598	09.93-11.95		
1.6i	C16NZ; C16NZ2; (55kW)	1598	09.88-11.95	225319	225317
1.6i	E16NZ; (55kW)	1598	09.88-10.90	225319	225317
1.6i	16LZ2; (55kW)	1598	09.93-11.95		
1.6; 1.6 S	16SV; (60kW)	1598	09.88-05.93		
1.8 S	E18NVR; (65kW)	1796	09.88-07.89		
1.8 S; 1.8i	18SV; C18NZ; (66kW)	1796	09.88-11.95	225362	225360
2.0	C20NEF; (74kW)	1998	04.88-09.89		
2.0i	20NE; C20NE; (85kW)	1998	09.88-11.95	225362	225360
2.0i; 2.0i GT	20SEH; (95kW)	1998	09.88-11.95		
2.0i 16V	X20XEV; (100kW)	1998	06.94-11.95		
2.0i 16V; 2000/GT 16V; 2000 16V	20XEJ; (110kW)	1998	01.89-06.94		
2.0i 16V; 2000/GT 16V	C20XE; (110kW)	1998	02.90-11.95		
2.0i TURBO	C20LET; (150kW)	1998	06.94-11.95		
2.5 V6	C25XE; (125kW)	2498	02.93-11.95		
1.7 TD	17DT; X17DT; (60kW)	1686	03.90-11.95	225301	
1.7 D	17D; 17DR; (42kW-44kW)	1700	09.88-11.95	225329	225328
VECTRA B					
1.6i	16LZ2; (55kW)	1598	10.95-07.03		
1.6i	X16SZR; (55kW)	1598	10.95-07.03		
1.6i 16V	X16XEL; Y16XE; Z16XE; (74kW)	1598	10.95-07.02		

RUVILLE YOUR PARTNER

Opel

215325											
	8	235340			8	265306	8	275307	1	295310(N)	
					8	265306					
215325											
215329											215329: 121527→
215332											
					24	265312					
215336					16	265302					215336:(ELV)
215337											215337:(ALV)
					16	265330					
	24	235301			24	265330					
					24	265302					
					8	265802					
	16	235302			16	265809					235302: 17180895→
	16	235807									235807: →17180894
											235807: 04654871→
215305					16	265302					
215310					16	265302			2	295310(N)	215310:(ELV)
215311											215311:(ALV)
					24	265302					
215305					16	265302					
					16	265302					
					16	265330					
	16	235356			16	265301					
	16	235300 [6]									
215304					16	265302			2	295310(N)	215304:(ALV)
215314											215314:(ELV)
215314					16	265302					215314:(ELV)
215314					16	265302			2	295310(N)	
215336					16	265302					215336:(ELV)
215337											215337:(ALV)
	16	235809			16	265809					
215313	8	235340			8	265306	8	275307	1	295310(N)	
215303	8	235320			8	265306			1	295310(N)	
215315	8	235340			8	265306	8	275307	1	295310(N)	225319: C16NZ; 225317: C16NZ; 215315: C16NZ; 235340: C16NZ; 265306: C16NZ; 295310(N): C16NZ; 275307: C16NZ
215315	8	235340			8	265306	8	275307	1	295310(N)	
					8	265306					
	8	235340			8	265306	8	275307	1	295310(N)	
215399	8	235340			8	265306	8	275307		[3]	
215323	8	235340			8	265306	8	275307		[3]	
					8	265306					
215323	8	235340			8	265306	8	275307		[3]	
	8	235340			8	265306	8	275307		[3]	
215310					16	265302			2	295310(N)	215310:(ELV)
215311											215311:(ALV)
					16	265302					265302: →14137011
					16	265312					265312: 14137012→
215333					16	265302			2	295310(N)	215333:(ELV); 265302: →14137011
215334					16	265312					215334:(ALV), →14137011; 265312: 14137012→
					16	265302	16	275307	2	295310(N)	265302: →14003804
					16	265312					265312: 14003805→
					24	265302					
215302											
215360	8	235320			8	265306	8	275307	1	295310(N)	
					8	265306					
215306					8	265306			1	295310(N)	215306: →02HVI800, 20000000→
215307											215307: 02HV1801→
215304					16	265302			2	295310(N)	215304: X16XEL, (ALV), →W1285446, →W5276825, →W7154258; 295310(N): X16XEL

3, 6 siehe Klappseite vorn • see fold in front.

		cm³			
Opel					
VECTRA B					
1.6i 16V	X16XEL; Y16XE; Z16XE; (74kW)	1598	10.95-07.02		
1.8i 16V	X18XE; X18XE1; (85kW)	1796	10.95-09.00		
1.8i 16V	Z18XE; (92kW)	1796	09.00-07.03		
2.0i	20NEJ; (82kW)	1998	10.95-04.02		
2.0i 16V	C20SEL; X20XEV; (100kW)	1998	10.95-09.00		
2.2i 16V	Z22SE; (108kW)	2198	09.00-07.03		
2.5i 500; 2.5i V6	X25XE; (125kW-143kW)	2498	10.95-09.00		
2.5	(144kW)	2498	10.99-06.00		
2.6i V6	Y26SE; (125kW)	2597	09.00-07.03		
1.7 TD	X17DT; (60kW)	1686	10.95-12.98	225301	
2.0 DI 16V; 2.0 DTI 16V; 2.2 DTI 16V	X20DTH; X20DTL; Y20DTH; Y22DTR; (60kW-92kW)	1995-2172	11.96-07.03	225305	
VECTRA C / GTS					
1.6; 1.6 16V	Z16XE; (74kW)	1598	06.04-		
1.8; 1.8 16V	Z18XE; Z18XEL; (81kW-90kW)	1796	04.02-		
2.0 16V TURBO; 2.0 TURBO; 2.2 16V; 2.2 direct	Z20NET; Z22SE; Z22YH; (108kW-129kW)	1998-2198	04.02-		
2.8 V6 TURBO	Z28NEL; Z28NET; (169kW-206kW)	2792	08.05-		
3.2 V6	Z32SE; (155kW)	3175	08.02-		
1.9 CDTI	Z19DT; (74kW-88kW)	1910	04.04-		
1.9 CDTI	Z19DTH; (110kW)	1910	04.04-		
2.0 DTI; 2.0 DTI 16V; 2.2 DTI; 2.2 DTI 16V	Y20DTH; Y22DTR; (74kW-92kW)	1995-2172	04.02-	225305	
VIVARO					
2.0 16V; 2.0 ECOTEC	F4R720; F4R820; (86kW-88kW)	1998	08.01-		
2.0 CDTI	M9R780; (66kW-84kW)	1995	01.06-		
ZAFIRA					
1.6	Z16YNG; (69kW)	1598	01.06-		
1.6; 1.6 CGN	Z16YNG; (70kW-71kW)	1598	09.01-06.05		
1.6 16V	X16XEL; Z16XE; (74kW)	1598	04.99-06.05		
1.6 CNG Turbo	Z16XNT; (110kW)	1598	02.09-		
1.8	Z18XEL; (81kW)	1796	02.03-06.05		
1.8 16V	X18XE1; (85kW)	1796	04.99-09.00		
1.8 16V	Z18XE; (92kW)	1796	09.00-06.05		
2.0; 2.0 OPC	Z20LEH; Z20LER; Z20LET; (141kW-177kW)	1998	09.01-		
2.2; 2.2i 16V	Z22SE; Z22YH; (108kW-110kW)	2198	09.00-		
1.9 CDTI	Z19DT; (74kW-88kW)	1910	07.05-		
1.9 CDTI	Z19DTH; (110kW)	1910	07.05-		
2.0 DI 16V; 2.0 DTI 16V; 2.2 DTI 16V	X20DTL; Y20DTH; Y22DTR; (60kW-92kW)	1995-2172	10.99-06.05	225305	
Peugeot					
104					
0.9; 1.1; 1.2	108(XV5); 109F(XW7); 129(XZ5); (33kW-42kW)	954-1219	08.79-06.88	225901	
106 I (1A/C)					
1.1	HDZ(TU1M); (44kW)	1124	09.91-04.96		
1.4 D	K9Y(TUD3Y); (37kW)	1361	09.92-04.96		
1.5 D	VJY(TUD5); (40kW)	1527	06.94-04.96		
106 II					
1.1i	HDZ(TU1M); HFX(TU1JP); (44kW)	1124	05.96-		
1.4i	KFW(TU3JP); KFX(TU3JP); (55kW)	1360	05.96-		
1.6 S16	NFX(TU5J4); (87kW)	1587	05.96-		
1.5 D	VJX(TUD5); VJY(TUD5); (40kW-42kW)	1527	05.96-		
107					
1.4 HDi	(40kW)	1398	06.05-	225908	

RUVILLE YOUR PARTNER

Opel → Peugeot

215314											215304: Y16XE; Z16XE, (ALV)
											215314:(ELV)
					16	265302			2	295310(N)	295310(N): X18XE
215336					16	265302					215336:(ELV)
215337											215337:(ALV)
					8	265306					
215310					16	265302			2	295310(N)	215310: C20SEL, (ELV); 265302: X20XEV;
											295310(N): X20XEV
215311											215310: X20XEV, (ELV), →14384799, →31000031
											215311: C20SEL, (ALV)
											215311: X20XEV, (ALV), →14384799, →31000031
					16	265330					
215331					24	265302					215331:(ALV)
215335											215335:(ELV)
					24	265302					
215331					24	265302					215331:(ALV)
215302											
215305					16	265302					
215304					16	265302					215304:(ALV)
215314											215314:(ELV)
215336					16	265302					215336:(ELV)
215337											215337:(ALV)
					16	265330					
	24	235301			24	265330					
					24	265302					
					8	265802					
	16	235302			16	265809					235302: 17180895→
	16	235807									235807: →17180894
											235807: 04654871→
215305					16	265302					
	16	235501			16	265503					
	16	235500 [6]									
	16	235502			16	265165					
215304					16	265302					215304:(ALV)
215304					16	265302					215304:(ALV)
215304					16	265302			2	295310(N)	215304:(ALV), Z16XE; 295310(N): X16XEL
215314											215314:(ELV)
					16	265302					
					16	265302					
215304					16	265302					215304:(ALV)
215336					16	265302					215336:(ELV)
215337											215337:(ALV)
					16	265302					
					16	265330					
					8	265802					
	16	235302			16	265809					235302: 17180895→
	16	235807									235807: →17180894
											235807: 04654871→
215305					16	265302					

215912											
215920											
215901					8	265898					
215901					8	265898			1	295907(N)	
215920	8	245902									215920: TU1M; 245902: TU1JP
215920	8	245902									245902:P.07728→
					16	265904			2	295902(N)	265904:(L3)
					16	265905					265905:(L4)
215901					8	265898			1	295907(N)	
215915	8	235921			8	265165					225908: DV4TD; 215915: DV4TD; 235921: DV4TD;
											265165: DV4TD
	8	235920									235920: DV4TD

6 siehe Klappseite vorn • see fold in front.

		cm³			
Peugeot					
205					
1.7 Diesel	161A(XUD7); (44kW)	1769	03.94-	225902 225910	
205 I (741A/C)					
0.9	108C(XV8); (33kW)	954	02.83-10.87	225901	
1.1; 1.4	109F(XW7); 109N(XW7); 150B(XY8); 150D(XY7); 150G(XY7); 150H(XY8); (36kW-59kW)	1124-1360	02.83-10.87	225901	
1.6	B1A(XU51C); B1E(XU51C); (53kW-55kW)	1580	08.86-10.87	225920	
1.6 GTi; 1.9 GTi	180A(XU5J); D6B(XU9JA(OHNEKAT)); DFZ(XU9J1); (75kW-94kW)	1580-1905	12.84-10.87		
1.8 D	161A(XUD7); (44kW)	1769	08.83-10.87	225902 225910	
205 I (741B,20D)					
1.4 CJ; 1.4 CT	150B(XY8); 150D(XY7); 150G(XY7); 150H(XY8); (44kW-58kW)	1360	04.86-05.89	225901	
1.6 CJ; 1.6 CTi; 1.9 CTi	180A(XU5J); 180Z(XU5J); BDY(XU5M3Z); DFZ(XU9J1); (65kW-76kW)	1580-1905	04.86-12.94		
205 II					
1.1; 1.4	109N(XW7); 150B(XY8); 150D(XY7); 150G(XY7); 150H(XY8); (36kW-58kW)	1124-1360	10.87-10.90	225901	
1.6	B1A(XU51C); B1E(XU51C); BAZ(XU5CP); (53kW-55kW)	1580	10.87-09.98	225920	
1.6; 1.6 GTI; 1.9 GTI	180A(XU5J); 180Z(XU5J); BDY(XU5M2Z); BDY(XU5M3Z); D2A(XU92C); D6B(XU9JA(G-KAT)); DFZ(XU9J1); DKZ(XU9JAZ); (65kW-94kW)	1580-1905	10.87-09.98		
1.8 D	161A(XUD7); (44kW)	1769	07.87-09.98	225902 225910	
1.8 TD	A8B(XUD7TE); (57kW)	1769	01.90-09.98		
1.9 D	DJZ(XUD9Y); (47kW)	1905	10.87-09.98	225902 225910	
206					
1.1; 1.1i; 1.4; 1.4i	HFX(TU1JP); HFZ(TU1JP); KFW(TU3JP); KFX(TU3JP); (44kW-55kW)	1124-1360	09.98-		
1.4; 1.4 16V	KFU(ET3J4); (65kW)	1360	10.03-		
1.6i	NFZ(TU5JP); (65kW)	1587	09.98-12.00		
1.6 16V	NFU(TU5JP4); (80kW)	1587	09.00-	225905	
2.0 16V; 2.0 S16	RFN(EW10J4); (100kW)	1997	09.00-		
2.0 RC	RFK(EW10J4S); (130kW)	1997	07.03-		
1.4 HDi	8HX(DV4TD); 8HZ(DV4TD); (50kW-51kW)	1398	09.01-	225908	
1.6 HDi FAP 110	9HY(DV6TED4); 9HZ(DV6TED4); (80kW)	1560	05.04-	225904	
1.9 D	WJZ(DW8); (51kW)	1868	09.98-11.01		
2.0 HDi; 2.0 HDi 90	RHY(DW10TD); (66kW)	1997	12.99-	225907	
207					
1.4	KFV(TU3A); (53kW-54kW)	1360	02.06-		
1.4 16V	KFU(ET3J4); (65kW)	1360	02.06-		
1.4 16V	(70kW)	1397	06.07-		
1.6 16V	NFU(TU5JP4); (80kW)	1587	02.06-	225905	
1.6 16V; 1.6 16V VTi	EP6; (88kW)	1598	02.07-		
1.6 16V RC; 1.6 16V TURBO	EP6DT; (110kW-128kW)	1598	02.06-		
1.4 HDi	(50kW)	1398	02.06-	225908	
1.6 HDi	9HX(DV6ATED4); (66kW)	1560	02.06-	225904	
1.6 HDi	9HX(DV6ATED4); (66kW)	1560	04.07-		
1.6 HDi	9HX(DV6ATED4); 9HY(DV6TED4); 9HZ(DV6TED4); (66kW-80kW)	1560	02.06-	225904	
305 II					
1.6	BAZ(XU5CP); (54kW)	1580	11.86-12.88		
1.6	B1A(XU51C); (55kW)	1580	10.82-12.88	225920	

RUVILLE YOUR PARTNER

Peugeot

215910					8	265910			1	295912(N)	215910:VP
215913											225910:VP
215912											
215912											
215921					8	265970					
					8	265970					
215910									1	295912(N)	215910:VP
215913											225910:VP
215912											
					8	265970					
215912											
215921					8	265970					
					8	265970					
215910									1	295912(N)	215910:VP
215913											225910:VP
215902									1	295912(N)	
215910									1	295912(N)	215910:VP
215913											225910:VP
	8	245902 [6]									
	16	235903			16	265165					
	16	235902 [6]									
	8	245902 [6]									
215909					16	265912					215909:(ELV)
215914											215914:(ALV)
					16	265903					
					16	265911					
215915	8	235921			8	265165					
	8	235920									
215916	16	235207			16	265165					225904:P.10586→; 215916:(ELV); 265165:P.→10585
215918					16	268400					215918:(ALV); 268400:P.10586→
					8	265910					
215906	8	235901			8	265165			1	295903(N)	
	8	235900									
	8	245902 [6]									
	16	235903			16	265165					
	16	235902 [6]									
		235006 [7]			8	265008					265008:(ALV), EP3
		235007 [7]			8	265009					265009:(ELV), EP3
		235008 [7]									
		235009 [7]									
		235010 [7]									
215909					16	265912					215909:(ELV)
215914											215914:(ALV)
		235006 [7]			8	265008					235006:(ELV); 265008:(ALV)
		235007 [7]			8	265009					235007:(ELV); 265009:(ELV)
		235008 [7]									235008:(ELV)
		235009 [7]									235009:(ELV)
		235010 [7]									235010:(ELV)
	8	235012									235012:(ALV)
	16	235012			16	265008					
215915	16	235921			8	265165					
	8	235920									
215916	16	235207			16	268400					215916:(ELV)
215918											215918:(ALV)
	16	235207			16	268400					
215916	16	235207			16	268400					215916:(ELV)
215918											215918:(ALV)
					8	265970					
215921					8	265970					

6 siehe Klappseite vorn • see fold in front. 7 siehe Seite 269 • see page 269

RUVILLE
YOUR PARTNER

		cm³			
Peugeot					
305 II					
1.6; 1.9	159(XU9S); 171(XU5S); DFZ(XU9J1); (66kW-75kW)	1580-1905	10.82-12.88		
1.9 D	162(XUD9); D9A(XUD9); (47kW-48kW)	1905	10.82-12.88	225902 225910	
306					
1.1; 1.1 XN	HDZ(TU1M); (44kW)	1124	05.93-05.01		
1.4; 1.4 SL; 1.4 XN	KDX(TU3MC); KFW(TU3JP); KFX(TU3JP); (55kW)	1360	05.93-04.02		
1.6; 1.6 SR	NFZ(TU5JP); (65kW)	1587	06.94-10.00		
1.8	LFY(XU7JP4); (81kW)	1761	03.97-04.02		
1.8; 1.8 ST; 1.8 XT	LFZ(XU7JP); (74kW)	1762	05.93-04.02		
2.0; 2.0 ST; 2.0 XSi	RFX(XU10J2); (89kW)	1998	05.93-04.02		
2.0	RFV(XU10J4R); (97kW)	1998	03.97-04.02		
2.0 S16	RFT(XU10J4); RFY(XU10J4Z); (110kW-112kW)	1998	05.93-05.01		
1.8 D	A9A(XUD7); (43kW)	1769	05.93-05.01	225902 225910	
1.9 D	WJY(DW8B); WJZ(DW8); (51kW)	1868	09.98-04.02		
1.9 D; 1.9 SLD; 1.9 XND	DJY(XUD9A); DJZ(XUD9Y); (47kW-50kW)	1905	05.93-04.02	225902 225910	
1.9 D	DHV(XUD9BSD); (55kW)	1905	03.98-04.02		
1.9 TD; 1.9 XRDT	DHY(XUD9TE); (66kW)	1905	05.93-04.02	225902 225910	
1.9 SRDT	DHY(XUD9TE); (66kW)	1905	06.94-05.01	225902 225910	
2.0 HDI 90	RHY(DW10TD); (66kW)	1997	06.99-04.02	225907	
307					
1.4	KFW(TU3JP); (55kW)	1360	08.00-		
1.4; 1.4 16V	KFU(ET3J4); (65kW)	1360	11.03-		
1.6; 1.6 BioFlex	NFU(TU5JP4); (80kW)	1587	08.00-	225905	
2.0; 2.0 16V	RFJ(EW10A); RFN(EW10J4); (100kW-103kW)	1997	08.00-		
2.0; 2.0 16V	RFK(EW10J4S); (130kW)	1997	10.03-		
1.4 HDi	8HX(DV4TD); 8HZ(DV4TD); (50kW)	1398	10.01-	225908	
1.6 D; 1.6 HDi; 1.6 HDi 110 FAP	9HX(DV6ATED4); 9HY(DV6TED4); 9HZ(DV6TED4); (66kW-80kW)	1560	02.04-	225904	
2.0 HDi 90	RHY(DW10TD); (66kW)	1997	08.00-	225907	
2.0 HDI 110; 2.0 HDI 110 FAP	RHS(DW10ATED); (79kW)	1997	08.00-		
2.0 HDi 135 FAP	RHR(DW10BTED4); (100kW)	1997	10.03-		
308					
1.4 16V	(70kW)	1397	09.07-		
1.6 16V	EP6; (88kW)	1598	09.07-		
1.6 16V	EP6DT; EP6DTS; (103kW-128kW)	1598	09.07-		
1.6 HDi	(66kW)	1560	09.07-	225904	
1.6 HDi	9HZ(DV6TED4); (80kW)	1560	09.07-	225904	
2.0 HDi	RHR(DW10BTED4); (100kW)	1997	09.07-		
308 CC					
1.6 16V	EP6; (88kW)	1598	06.09-		
1.6 16V	EP6DT; (103kW-110kW)	1598	06.09-		
1.6 16V	(115kW)	1598	06.09-		
1.6 HDi	(82kW)	1560	06.09-		
2.0 D	(103kW)	1997	04.09-		

RUVILLE YOUR PARTNER

Peugeot

					8	265970					
215910									1	295912(N)	215910:VP
215913											225910:VP
215920											
215920	8	245902									215920: TU3JP; 245902: TU3JP, P.07875→
	8	245902 [6]									245902:P.07875→
					16	265950					
215908					8	265970			1	295907(N)	
215919					8	265970			1	295907(N)	
					16	265950					
									2	295907(N)	
215910					8	265910			1	295912(N)	215910:VP
215913											225910:VP
					8	265910					
215910					8	265910			1	295912(N)	215910:VP
215913											225910:VP
					8	265910					
215910					8	265910			1	295912(N)	215910:VP
215913											225910:VP
215910					8	265910			1	295912(N)	215910:VP
215913											225910:VP
215906	8	235901			8	265165			1	295901(N)	
	8	235900									
	8	245902 [6]									
	16	235903			16	265165					
	16	235902 [6]									
215909					16	265912					215909:(ELV)
215914											215914:(ALV)
					16	265903					
					16	265911					
215915	8	235921			8	265165					
	8	235920									
215916	16	235207			16	265165					225904:P.10586→; 215916:(ELV); 265165:P.→10585
215918					16	268400					215918:(ALV); 268400:P.10586→
215906	8	235901			8	265165			1	295903(N)	
	8	235900									
	8	235901			8	265165			1	295903(N)	
	8	235900 [6]									
	16	235906 [6]									235906:P.→11108
		235006 [7]			8	265008					265008:(ALV), EP3
		235007 [7]			8	265009					265009:(ELV), EP3
		235008 [7]									
		235009 [7]									
		235010 [7]									
		235006 [7]			8	265008					235006:(ELV); 265008:(ALV)
		235007 [7]			8	265009					235007:(ELV); 265009:(ELV)
		235008 [7]									235008:(ELV)
		235009 [7]									235009:(ELV)
		235010 [7]									235010:(ELV)
	8	235012									235012:(ALV)
	16	235012			16	265008					
215916	16	235207			16	268400					225904: DV6ATED4; 215916: DV6ATED4, (ELV); 235207: DV6ATED4; 268400: DV6ATED4
215918											215918: DV6ATED4, (ALV)
215916	16	235207			16	268400					215916:(ELV)
215918											215918:(ALV)
	16	235906 [6]							1	295903(N)	235906:P.→11108
		235006 [7]			8	265008					235006:(ELV); 265008:(ALV)
		235007 [7]			8	265009					235007:(ELV); 265009:(ELV)
		235008 [7]									235008:(ELV)
		235009 [7]									235009:(ELV)
		235010 [7]									235010:(ELV)
	8	235012									235012:(ALV)
	16	235012			16	265008					
	16	235012			16	265008					235012: EP6CDT; 265008: EP6CDT
	16	235207			16	268400					
	8	236602			16	266601			1	295903(N)	236602:(ALV)
	8	236603									236603:(ELV)

6 siehe Klappseite vorn • see fold in front. 7 siehe Seite 269 • see page 269

		cm³			
308 CC					
2.0 HDi	(120kW)	1997	06.09-		
308 SW					
1.4 16V	(70kW)	1397	09.07-		
1.4 16V; 1.6 16V	EP6; (72kW-88kW)	1397-1598	09.07-		
1.6 16V	EP6DT; (103kW-115kW)	1598	09.07-		
1.6 16V	(128kW)	1598	03.08-		
2.0 Bioflex	(103kW)	1997	01.08-		
1.6 HDi	(66kW)	1560	09.07-	225904	
1.6 HDi	(80kW)	1560	09.07-	225904	
2.0 HDi	RHR(DW10BTED4); (100kW)	1997	09.07-		
2.0 HDi	(103kW)	1997	09.07-		
2.0 HDi	(120kW)	1997	06.09-		
309 I					
1.6	B1E(XU51C); (53kW)	1580	08.87-07.89		
1.6	B1A(XU51C); (55kW)	1580	10.85-07.89	225920	
1.6; 1.9; 1.9 GTI	BAZ(XU5CP); DDZ(XU9M); DFZ(XU9J1); DKZ(XU9JAZ); (55kW-88kW)	1580-1905	03.86-12.89		
1.9 D	162(XUD9); D9A(XUD9); (47kW)	1905	06.86-07.89	225902 225910	
309 II					
1.6; 1.9; 1.9 GTI	BDY(XU5M2Z); BDY(XU5M3Z); BDZ(XU5M); DDZ(XU9M); DFZ(XU9J1); DKZ(XU9JAZ); (65kW-88kW)	1580-1905	07.89-12.93		
1.9 GTI 16V	D6C(XU9J4); (116kW)	1905	08.89-07.90		
1.8 Diesel	161A(XUD7); (44kW)	1769	07.89-12.93	225902 225910	
1.8 TD	A8B(XUD7TE); (57kW)	1769	08.89-12.93		
1.9 D	162(XUD9); D9A(XUD9); DJZ(XUD9Y); (47kW)	1905	07.89-12.93	225902 225910	
405 I					
1.6	B1E(XU51C); BAZ(XU5CP); (53kW-55kW)	1580	07.87-12.92	225920	
1.6	BAZ(XU5CP); (55kW)	1580	10.88-08.92		
1.6	BDY(XU5M2Z); BDY(XU5M3Z); BDZ(XU5M); (65kW-66kW)	1580	07.87-12.92		
1.9; 1.9 INJECTION	D2C(XU92C(U-KAT)); DDZ(XU9M); DFZ(XU9J1); DKZ(XU9JAZ); (70kW-88kW)	1905	07.87-12.92		
1.9 SPORT MI 16	D6C(XU9J4); (116kW)	1905	07.87-11.91		
1.8 TD	A8A(XUD7TE); AJZ(XUD7TEY); (66kW)	1769	03.88-12.92		
1.9 D	D9B(XUD9A); DJY(XUD9A); DJZ(XUD9Y); (47kW-51kW)	1905	03.88-12.92	225902 225910	
405 II					
1.6	BDY(XU5M2Z); BDY(XU5M3Z); BDZ(XU5M); BFZ(XU5JP); (65kW)	1580	08.92-10.96		
1.8	LFZ(XU7JP); (74kW)	1762	08.92-10.96		
2.0; 2.0 X4	RFX(XU10J2); (89kW)	1998	08.92-10.96		
2.0 16V; 2.0 MI 16	RFT(XU10J4); RFY(XU10J4Z); (110kW-112kW)	1998	08.92-10.95		
1.9 D	DJY(XUD9A); DJZ(XUD9Y); (47kW-50kW)	1905	08.92-10.96	225902 225910	
1.9 TD	DHY(XUD9TE); (66kW)	1905	08.92-10.96	225902 225910	
406					
1.6	BFZ(XU5JP); (65kW)	1580	11.95-05.04		
1.8 16V	6FZ(EW7J4); (85kW)	1749	10.00-10.04		
1.8; 1.8 BREAK	LFX(XU7JB); (66kW)	1761	05.97-10.04		
1.8 16V	LFY(XU7JP4); (81kW)	1761	11.95-10.00		
2.0 16V	RFN(EW10J4); RFR(DEW10J4); (99kW-100kW)	1997	01.99-12.04		
2.0 16V HPi	RLZ(EW10D); (103kW)	1997	05.01-10.04		
2.0; 2.0 16V	RFV(XU10J4R); (97kW)	1998	11.95-12.04		

RUVILLE YOUR PARTNER

Peugeot

	8	236602			16	266601					236602: DW10CTED4, (ALV); 266601: DW10CTED4
	8	236603									236603: DW10CTED4, (ELV)
		235006 [7]			8	265008					265008:(ALV), EP3
		235007 [7]			8	265009					265009:(ELV), EP3
		235008 [7]									
		235009 [7]									
		235010 [7]									
		235006 [7]			8	265008					235006:(ELV); 265008:(ALV)
		235007 [7]			8	265009					235007:(ELV); 265009:(ELV)
		235008 [7]									235008:(ELV)
		235009 [7]									235009:(ELV)
		235010 [7]									235010:(ELV)
	8	235012									235012:(ALV)
	16	235012			16	265008					
	16	235012			16	265008					265008: EP6DTS
					16	265903					
215916	16	235207			16	268400					225904: DV6ATED4; 215916: DV6ATED4, (ELV); 235207: DV6ATED4; 268400: DV6ATED4
215918											215918: DV6ATED4, (ALV)
215916	16	235207			16	268400					225904: DV6TED4; 215916: DV6TED4, (ELV); 235207: DV6TED4; 268400: DV6TED4
215918											215918: DV6TED4, (ALV)
	16	235906 [6]							1	295903(N)	235906: DW10BTED4, P.→11108
									1	295903(N)	
	8	236602			16	266601					236602: DW10CTED4, (ALV); 266601: DW10CTED4
	8	236603									236603: DW10CTED4, (ELV)
					8	265970					
215921					8	265970					
					8	265970					
215910									1	295912(N)	215910:VP
215913											225910:VP
					8	265970					
									1	295907(N)	
215910					8	265910			1	295912(N)	215910:VP
215913											225910:VP
215902									1	295912(N)	
215910									1	295912(N)	215910:VP
215913											225910:VP
215921					8	265970					225920: XU51C; 215921: XU51C
					8	265970					
215919					8	265970					
					8	265970					
									1	295907(N)	
215902									1	295912(N)	
215910									1	295912(N)	215910:VP
215913											225910:VP
215908					8	265970			1	295907(N)	295907(N): XU5JP
215908					8	265970			1	295907(N)	
215919					8	265970			1	295907(N)	
									2	295907(N)	
215910									1	295912(N)	215910:VP
215913											225910:VP
215910					8	265910			1	295912(N)	215910:VP
215913											225910:VP
215908					8	265970			1	295907(N)	
					16	265903					
216616					8	265970			1	295907(N)	
					16	265950					
					16	265903					
	16	235911			16	265165					
	16	235910 [6]									
					16	265950					265950:P.07360→

6 siehe Klappseite vorn • see fold in front. 7 siehe Seite 269 • see page 269

RUVILLE
YOUR PARTNER

		cm³			
Peugeot					
406					
2.0 TURBO	RGX(XU10J2TE); (108kW)	1998	04.96-10.04		
2.2	3FZ(EW12J4); (116kW)	2230	07.00-12.04		
2.9 24V; 3.0 24V; 3.0 V6 24V	XFZ(ES9J4); (140kW)	2946	10.96-12.04		
3.0 V6	XFX(ES9J4S); (152kW)	2946	03.00-12.04		
1.9 D	DHW(XUD9SD); (55kW)	1905	10.96-10.04		
1.9 TD	DHX(XUD9TE); DHY(XUD9TE); (66kW-68kW)	1905	01.96-10.04	225902 225910	
2.0 HDI 90	RHY(DW10TD); (66kW)	1997	02.99-10.04	225907	
2.0 HDi; 2.0 HDi 110 FAP	RHS(DW10ATED); RHZ(DW10ATED); (79kW-80kW)	1997	06.98-10.04		
2.1 TD 12V	P8C(XUD11BTE); (80kW)	2088	01.96-10.04		
2.2 HDi	4HX(DW12TED4/FAP); (98kW)	2179	03.00-12.04		
407					
1.8; 1.8 16V; 2.0; 2.0 16V; 2.0 Bioflex; 2.2; 2.2 16V	3FY(EW12J4); 3FZ(EW12J4); 6FY(EW7A); 6FZ(EW7J4); RFJ(EW10A); RFN(EW10J4); (85kW-120kW)	1749-2230	05.04-		
3.0; 3.0 V6	XFV(ES9A); (155kW)	2946	05.04-		
1.6 HDi 110 FAP	9HY(DV6TED4); (80kW)	1560	05.04-	225904	
2.0 HDi; 2.0 HDi 135 FAP	RHR(DW10BTED4); (100kW)	1997	05.04-		
2.0 HDi	(103kW-120kW)	1997	08.08-		
2.2 HDi	(120kW)	2179	06.08-		
2.2 HDi 170 FAP	4HT(DW12BTED4); (125kW)	2179	05.06-		
2.7 HDi; HDi	UHZ(DT17); (150kW)	2720	10.05-		
3.0 HDi	DT20C; (177kW)	2992	06.09-		
605					
2.0	RFZ(XU10J2Z); (89kW)	1998	06.89-09.99		
2.0 16V	RFV(XU10J4R); (97kW)	1998	07.94-09.99		
2.0 TURBO	RGX(XU10J2TE); RGY(XU10J2TE); (104kW-108kW)	1998	07.91-09.99		
3.0 V6	ES9J4; (140kW)	2946	04.97-09.99		
3.0	UFZ(ZPJ); (123kW)	2963	10.89-09.99		
3.0 SV 24	UKZ(ZPJ4/Z); (147kW)	2963	08.89-09.99		
2.1 TD	PHZ(XUD11ATE); (80kW)	2088	06.89-09.99		
2.1 TD 12V	P8C(XUD11BTE); (80kW)	2088	08.94-09.99		
2.1 D	P9A(XUD11A); (60kW)	2138	06.89-07.95		
2.5 TD	THY(DK5ATE); (95kW)	2446	07.94-09.99		
607					
2.0; 2.2 16V	3FY(EW12J4); 3FZ(EW12J4); RFN(EW10J4); (100kW-120kW)	1997-2230	02.00-		
3.0 V6 24V	XFV(ES9A); XFX(ES9J4S); (152kW-155kW)	2946	02.00-		
2.0 HDi	RHS(DW10ATED); RHZ(DW10ATED); (79kW-80kW)	1997	05.00-	225907	
2.0 HDi	RHR(DW10BTED4); (100kW)	1997	09.05-		
2.2 HDi	4HX(DW12TED4/FAP); (98kW)	2179	02.00-		
2.2 HDi	4HT(DW12BTED4); (125kW)	2179	05.06-		
2.7 HDi 24V	DT17TED4; (150kW)	2721	12.04-		
806					
1.8	LFW(XU7JP); (73kW)	1761	07.95-08.02		
2.0 16V	RFN(EW10J4); (100kW)	1997	09.00-08.02		
2.0	RFU(XU10J2); (89kW)	1998	06.94-08.02		
2.0 16V	RFV(XU10J4R); (97kW)	1998	05.98-09.00		
2.0 TURBO	RGX(XU10J2TE); (108kW)	1998	06.94-08.02		
1.9 TD	DHX(XUD9TE); DHY(XUD9TE); (66kW-68kW)	1905	07.95-08.02	225902 225910	
2.0 HDi	RHZ(DW10ATED); (80kW)	1997	08.99-08.02	225907	
2.0 HDI 16V	RHW(DW10ATED4); (80kW)	1997	08.99-08.02		
2.1 TD 12V	P8C(XUD11BTE); (80kW)	2088	06.96-08.99		
807					
2.0; 2.0 16V; 2.2	3FZ(EW12J4); RFJ(EW10A); RFN(EW10J4); (100kW-116kW)	1997-2230	06.02-		
3.0 V6	XFX(ES9J4S); (150kW)	2946	06.02-		
2.0 HDi FAP	RHK(DW10UTED4); RHM(DW10ATED4); RHT(DW10ATED4); RHW(DW10ATED4); (79kW)	1997	06.02-		
2.0 HDi	RHK(DW10UTED4); (80kW-88kW)	1997	04.04-		
2.0 HDI	RHR(DW10BTED4); (100kW)	1997	06.06-		
2.2 HDi FAP	4HX(DW12TED4/FAP); (94kW)	2179	06.02-		
2.2 HDi	4HT(DW12BTED4); (125kW)	2179	06.06-		
1007					
1.4	KFV(TU3JP); (54kW)	1360	04.05-		

RUVILLE YOUR PARTNER

Peugeot

					8	265970			1	295901(N)	295901(N):(ST)
					16	265903					
					24	265901					
					24	265905					
					8	265910					
215910					8	265910			1	295912(N)	215910:VP
215913											225910:VP
215906	8	235901			8	265165					
	8	235900									
	8	235901			8	265165			1	295903(N)	
	8	235900 [6]									
215904					8	265907			1	295912(N)	
	16	235906 [6]							1	295903(N)	
					16	265903					
					24	265905					
215916	16	235207			16	265165					225904:P.10586→; 215916:(ELV); 265165:P.→10585
215918					16	268400					215918:(ALV); 268400:P.10586→
	16	235906 [6]							1	295903(N)	235906:P.→11108
	8	236602			16	266601			1	295903(N)	236602:(ALV)
	8	236603									236603:(ELV)
	16	236600			16	266602					
	16	236600			16	266602			1	295903(N)	
	24	235202			24	265165					
	24	235908 [6]									
	24	235908 [6]									235908: DT20C
215919					8	265970			1	295907(N)	
215919					16	265950					265950:P.07360→
					8	265970			1	295901(N)	295901(N):(ST)
					24	265901					
					12	265906					
					24	265906					
215904					12	265907			2	295912(N)	
215904					8	265907			1	295912(N)	
					12	265907			2	295912(N)	
					12	265907					
					16	265903					
					24	265905					
215906	8	235901			8	265165			1	295903(N)	
	8	235900									
	16	235906 [6]									235906:P.→11108
	16	235906 [6]							1	295903(N)	
	16	236600			16	266602					
	24	235202			24	265165					
	24	235908 [6]									
215908					8	265970			1	295907(N)	
					16	265903					
215919					8	265970			1	295907(N)	
					16	265950					
					8	265970			1	295901(N)	295901(N):(ST)
215910					8	265910			1	295912(N)	215910:VP
215913											225910:VP
215906	8	235901			8	265165			1	295903(N)	
	8	235900									
	16	235906 [6]							1	295903(N)	
215904					8	265907			1	295912(N)	
					16	265903					
					24	265905					
	16	235906 [6]							1	295903(N)	
	16	235906 [6]									
	16	235906 [6]									235906:P.→11108
	16	235906 [6]									
	16	236600			16	266602					
	8	245902 [6]									

6 siehe Klappseite vorn • see fold in front.

Peugeot

		cm³			
1007					
1.4 16V	KFU(ET3J4); (65kW)	1360	10.05-		
1.6	NFU(TU5JP4); (80kW)	1587	04.05-		
1.4 HDi	8HX(DV4TD); 8HZ(DV4TD); (50kW)	1398	04.05-	225908	
1.6 HDi	9HZ(DV6TED4); (80kW)	1560	06.07-	225904	
3008					
1.6 VTi	EP6; (88kW)	1598	06.09-		
1.6 THP	5FX(EP6DT); (110kW-115kW)	1598	06.09-		
1.6 HDi	9HZ(DV6TED4); (80kW)	1560	06.09-		
2.0 HDi	(110kW)	1997	06.09-		
2.0 HDi	(120kW)	1997	06.09-		
4007					
2.2 HDi	(115kW)	2179	02.07-		
5008					
1.6 16V	EP6; (88kW)	1598	09.09-		
1.6 16V	(115kW)	1598	09.09-		
1.6 HDi	(80kW)	1560	09.09-		
2.0 HDi	RHH(DW10CTED4); (110kW-120kW)	1997	06.09-		
BIPPER					
1.4	(54kW)	1360	02.08-		
1.4 HDi	(50kW)	1398	02.08-	225908	
BOXER					
2.2 HDi 100; 2.2 HDi 120	(74kW-88kW)	2198	04.06-		
3.0 D; 3.0 HDi	(107kW-115kW)	2998-2999	02.07-		
BOXER (230)					
2.0i	RFW(XU10J2); (80kW)	1998	03.94-04.02		
1.9 D; 1.9 TD	D8C(XUD9AU); DHY(XUD9TE); DJY(XUD9A); (50kW-66kW)	1905	03.94-04.02	225902 225910	
1.9 TD	D8C(XUD9UTF); XUD9TE; (66kW-68kW)	1905	03.94-04.02		
2.0 HDi	(62kW)	1997	08.01-04.02		
2.4 D	T9A(DJ5); (63kW)	2446	03.94-04.02		
2.4 TD	T8A(DJ5T); (76kW)	2446	03.94-04.02		
2.4 TDI	THX(DJ5TED); (79kW)	2446	01.97-04.02	225903	
2.8 HDi	8140.43S; (94kW)	2798	10.00-04.02		
BOXER (244)					
2.0	RFL(XU10J2U); (81kW)	1998	04.02-		
2.0 HDi	RHV(DW10UTD); (62kW)	1997	04.02-		
2.2 HDi	4HY(DW12UTED); (74kW)	2179	04.02-	225907	
2.8 HDi	8140.43S; (94kW-107kW)	2798	04.02-		
EXPERT					
1.8	LFZ(XU7JP); (74kW)	1761	10.96-09.00		
2.0; 2.0 16V	RFH(EW10A); RFJ(EW10A); RFN(EW10J4); (100kW-103kW)	1997	07.00-		
1.6 HDi 90	(66kW)	1560	01.07-		
1.9 D 70	WJY(DW8B); WJZ(DW8); (51kW)	1868	12.98-		
1.9 D; 1.9 TD	D8B(XUD9TE); D9B(XUD9AU); DHX(XUD9TE); (51kW-68kW)	1905	02.96-	225902 225910	
2.0 HDi	RHX(DW10BTED); (69kW)	1997	07.00-	225907	

RUVILLE YOUR PARTNER

Peugeot

	16	235903			16	265165					
	16	235902 [6]									
215909					16	265912					215909:(ELV)
215914											215914:(ALV)
215915	8	235921			8	265165					
	8	235920									
215916	16	235207			16	268400					215916:(ELV)
215918											215918:(ALV)
		235006 [7]			8	265008					235006:(ELV); 265008:(ALV)
		235007 [7]			8	265009					235007:(ELV); 265009:(ELV)
		235008 [7]									235008:(ELV)
		235009 [7]									235009:(ELV)
		235010 [7]									235010:(ELV)
	8	235012									235012:(ALV)
	16	235012			16	265008					
	16	235207			16	268400					
	8	236602			16	266601			1	295903(N)	236602:(ALV)
	8	236603									236603:(ELV)
	8	236602			16	266601					236602:(ALV)
	8	236603									236603:(ELV)
	16	236600			16	266602			1	295903(N)	
		235006 [7]			8	265008					235006:(ELV); 265008:(ALV)
		235007 [7]			8	265009					235007:(ELV); 265009:(ELV)
		235008 [7]									235008:(ELV)
		235009 [7]									235009:(ELV)
		235010 [7]									235010:(ELV)
	8	235012									235012:(ALV)
	16	235012			16	265008					235012: EP6CDT; 265008: EP6CDT
	16	235207			16	268400					
	8	236602			16	266601			1	295903(N)	236602:(ALV)
	8	236603									236603:(ELV)
	8	245902 [6]									
215915	8	235921			8	265165					225908: DV4TED; 215915: DV4TED; 235921: DV4TED; 265165: DV4TED
	8	235920									235920: DV4TED
	1	235208 [6]									
	16	235803 [6]									
215919					8	265970			1	295907(N)	
215910					8	265910			1	295912(N)	215910:VP
215913											225910:VP
					8	265910					
	8	235901			8	265165			1	295903(N)	235901: DW10UTD; 265165: DW10UTD
	8	235900 [6]									235900: DW10UTD
215903					12	265907					
215905					12	265907					
215907					8	266600					
215801											
215919					8	265970					
	8	235901			8	265165			1	295903(N)	
	8	235900 [6]									
215906	8	235901			8	265165			1	295903(N)	
	8	235900									
215801											
215908											
					16	265903					
	16	235207			16	265165					235207: DV6ATED4; 265165: DV6ATED4, P.→10585
					16	268400					268400: DV6ATED4, P.10586→
					8	265910					
215910					8	265910			1	295912(N)	215910:VP
215913											225910:VP
215906	16	235901			16	265165			1	295903(N)	
	16	235900									

Peugeot

		cm³			
EXPERT					
2.0 HDi; 2.0 HDi Comfort	RHX(DW10BTED); (69kW)	1997	10.00-10.06	225907	
2.0 HDi	RHW(DW10ATED4); (80kW)	1997	07.00-		
2.0 HDi	RHZ(DW10ATED); (80kW)	1997	07.00-	225907	
2.0 HDi	(80kW)	1997	10.00-11.03	225907	
2.0 HDi 120	RHK(DW10UTED4); (88kW)	1997	01.07-		
2.0 HDi 120	RHK(DW10UTED4); (88kW)	1997	01.07-		
2.0 HDi 140	RHR(DW10BTED4); (100kW)	1997	01.07-		
2.0 HDi 140	RHR(DW10BTED4); (100kW)	1997	01.07-		
J5 (290)					
1.9 D	D9B(XUD9A); (51kW)	1905	10.90-	225902 225910	
PARTNER					
1.1	HDZ(TU1M); (44kW)	1124	06.96-		
1.1	HDZ(TU1M); HFX(TU1JP); (44kW)	1124	06.96-		
1.4	(54kW)	1360	11.02-10.06		
1.4; 1.4 BiFuel	KFW(TU3JP); KFX(TU3JP); TU32; (55kW)	1360	06.96-		
1.6; 1.6 16V	NFU(TU5JP4); (66kW-80kW)	1587	09.00-	225905	
1.8	LFX(XU7JB); (66kW)	1761	05.97-		
1.6 HDi; 1.6 HDi 75	(55kW)	1560	02.06-		
1.6 HDi; 1.6 HDi 90	9HX(DV6ATED4); (66kW)	1560	02.06-	225904	
1.6 HDi	(80kW)	1560	04.08-	225904	
1.8 D	A9A(XUD7); (43kW)	1769	06.96-	225902 225910	
1.9 D	WJY(DW8B); WJZ(DW8); (51kW)	1868	06.96-		
1.9 D	DJY(XUD9A); (50kW-51kW)	1905	06.96-	225902 225910	
1.9 D	XUD9; (51kW)	1905	05.96-12.98		
2.0 HDi	RHY(DW10TD); (66kW)	1997	02.00-	225907	
2.0 HDi	RHY(DW10TD); (66kW)	1997	04.04-	225907	
2.0 HDi	RHY(DW10TD); (66kW)	1997	04.04-08.05	225907	
RCZ					
1.6 16V	(115kW)	1598	03.10-		
1.6 16V	(147kW)	1598	06.10-		
2.0 HDi	(120kW)	1997	03.10-		

Porsche

911 (993)					
3.6 CARRERA; 3.6 CARRERA 4	M64.05; M64.06; M64.07; M64.08; (200kW)	3600	10.93-08.95		
3.6 CARRERA; 3.6 CARRERA 4; 3.8 CARRERA RS; 3.8 CARRERA RS 4	M64.20; M64.21; M64.22; M64.23; M64.24; (210kW-221kW)	3600-3800	06.95-09.97		
911 (996)					
3.4 CARRERA; 3.4 Carrera 4	M96.01; M96.02; M96.04; (221kW)	3387	09.97-09.01		
3.6 Carrera; 3.6 Carrera 4	M96.03; (235kW)	3596	10.01-08.05		
3.6 GT3	M96.76; (265kW)	3598	03.99-08.05		
3.6 Turbo 4	M96.70; (309kW)	3600	06.00-08.05		
911 (997)					
3.6 Carrera; 3.6 Carrera 4	M96.05; (239kW)	3596	07.04-		
3.6 TURBO	M97.70; (353kW)	3600	03.06-		
3.8 Carrera 4S; 3.8 Carrera S	M97.01; (261kW)	3824	07.04-		
911 TARGA					
3.6; 3.6 Carrera 4	M96.03; M96.05; (235kW-239kW)	3596	12.01-		
3.6 CARRERA	M64.21; M64.22; M64.23; M64.24; (210kW)	3600	08.95-09.97		
3.7 CARRERA	M64.20; (221kW)	3800	05.96-09.97		
3.8 Carrera 4S	M97.01; (261kW)	3824	11.06-		

RUVILLE YOUR PARTNER

Peugeot → Porsche

215906	16	235901			16	265165					
	16	235900									
	16	235906 [6]							1	295903(N)	
215906	8	235901			8	265165			1	295903(N)	
	8	235900									
215906	8	235901			8	265165					
	8	235900									
	16	235906 [6]							1	295903(N)	235906:P.11023→, P.→11108
	16	235906 [6]									235906:P.11023→, P.→11108
	16	235906 [6]							1	295903(N)	235906:P.→11108
	16	235906 [6]									235906:P.→11108
215910					8	265910			1	295912(N)	215910:VP
215913											225910:VP
215920											215920: TU1M
215920	8	245902									215920: TU1M; 245902: TU1JP
	8	245902 [6]									
215920	8	245902									245902:P.07875→
215909					16	265912					215909:(ELV)
215914											215914:(ALV)
216616					8	265970			1	295907(N)	
	16	235207			16	268400					235207: DV6B; 268400: DV6B
215916	16	235207			16	265165					225904:P.10586→; 215916:(ELV); 265165:P.→10585
215918					16	268400					215918:(ALV); 268400:P.10586→
215916	16	235207			16	265165					225904:P.10586→; 215916:(ELV); 235207: DV6TED4; 265165: DV6TED4, P.→10585
215918					16	268400					215918:(ALV); 268400: DV6TED4, P.10586→
215910					8	265910			1	295912(N)	215910:VP
215913											225910:VP
					8	265910					
215910					8	265910			1	295912(N)	215910:VP
215913											225910:VP
					8	265910					
215906	8	235901			8	265165			1	295903(N)	
	8	235900									
215906	8	235901			8	265165					
	8	235900									
215906	8	235901			8	265165			1	295903(N)	
	8	235900									
	16	235012			16	265008					235012: EP6CDT; 265008: EP6CDT
		235006 [7]			8	265008					235006:(ELV); 265008:(ALV)
		235007 [7]			8	265009					235007:(ELV); 265009:(ELV)
		235008 [7]									235008:(ELV)
		235009 [7]									235009:(ELV)
		235010 [7]									235010:(ELV)
	8	235012									235012:(ALV)
	8	236602			16	266601			1	295903(N)	236602: DW10CTED4, (ALV); 266601: DW10CTED4; 295903(N): DW10CTED4
	8	236603									236603: DW10CTED4, (ELV)

					12	266710					266710:→01.95
					12	266715					266715:01.96→
					24	268902					
					12	268902					268902:(ALV)
					24	266703					
					12	268902					268902:(ALV)
					12	268902					268902:(ALV)
					12	266703					266703:(ALV)
					12	268902					268902:(ALV)
					12	268902					268902:(ALV)
					12	266715					266715:01.96→
					12	266715					
					12	268902					268902:(ALV)

6 siehe Klappseite vorn • see fold in front. 7 siehe Seite 269 • see page 269

		cm³			
Porsche					
928					
4.9 S,S4; 5.0 GT; 5.0 S4; 5.4 GTS	M28.41; M28.42; M28.47; M28.49; M28.50; (235kW-257kW)	4957-5397	08.86-11.95		
944					
2.5 S; 3.0 S2	M44.40; M44.41; (140kW-155kW)	2479-2990	08.86-07.91		
968					
3.0	M44.43; M44.44; (176kW)	2990	06.91-11.95		
BOXSTER (986)					
2.5 24V; 2.7; 2.7 24V; S 3,2; S 3.2	M96.20; M96.21; M96.22; M96.23; M96.24; (150kW-191kW)	2480-3179	09.96-		
BOXSTER (987)					
2.7	M96.25; (176kW)	2687	11.04-		
2.7	M97.20; (180kW)	2687	07.06-		
S 3.2	M96.26; (206kW)	3179	11.04-		
S 3.4	M97.21; (217kW)	3387	07.06-		
CAYENNE					
S; TURBO	M48.00; M48.50; (250kW-331kW)	4511	09.02-		
3.0 TDI	(176kW)	2967	02.09-		
CAYMAN					
2.7; S 3.4	M97.20; M97.21; (180kW-217kW)	2687-3387	11.05-		
Puch					
G-MODELL (W 460)					
230 GE	M102.981; M102.987; (92kW)	2299	04.82-08.92	225103 225104	
280 GE	M110.994; (110kW)	2746	08.84-08.89	225180	
240 GD	OM616.936; (53kW)	2399	03.79-08.87		
250 GD	OM602.930; (62kW)	2497	10.87-12.92		
G-MODELL (W 461)					
230 GE	M102.996; (92kW)	2298	06.93-		
290 GD/G 290 D; G 290 TD	OM602.942; OM602.983; (70kW-88kW)	2874	04.92-		
G-MODELL (W 463)					
230 GE	M102.989; (93kW)	2298	06.90-06.93		
300 GE	M103.987; (125kW)	2960	06.90-		
G 320	M104.996; (155kW)	3199	09.94-12.97		
G 36 AMG	(200kW)	3606	01.95-		
G 500	M113.962; (218kW)	4966	04.98-		
G 55 AMG	(260kW)	5439	04.99-		
300 GD; 350 G Turbo D	OM603.931; OM603.972; (83kW-100kW)	2996-3449	09.89-		
Renault					
9					
1.6 D	F8M700; F8M720; F8M730; (40kW)	1596	10.82-12.88		
11					
1.6 D	F8M700; F8M720; F8M730; (40kW)	1596	08.83-12.88		
14					
1.4	X5J; (44kW)	1360	12.81-12.83	225901	
18					
2.1 D	852710; J8S711; (49kW)	2068	11.80-07.86	225542	
19 I					
1.8 16V	F7P704; (99kW)	1764	06.89-04.92		
1.9 D	F8Q706; F8Q742; (47kW-48kW)	1870	01.88-12.92		
19 II					
1.8 16V	F7P704; (99kW)	1764	04.92-06.96		
1.9 D	F8Q742; (47kW)	1870	04.92-12.95		
1.9 D	F8Q706; F8Q742; (48kW)	1870	03.92-12.95		
1.9 TD	F8Q744; (66kW)	1870	04.92-12.95		
20					
2.1 D	852; (47kW)	2068	10.80-12.83	225542	
21					
2.1 D; 2.1 TD	J8S704; J8S714; J8S786; J8S788; (48kW-65kW)	2068	03.86-08.94	225542	

RUVILLE YOUR PARTNER

Porsche → Renault

					32	266705					
					16	266705					
					16	266705					
					24	265010					
					24	268902					
					12	268902					268902:(ALV)
					24	268902					
					12	268902					268902:(ALV)
					32	268902					
	24	235406			24	265404					
					12	268902					268902:(ALV)

215108	8	245104			8	265113					225103: M102.987;215108: M102.981;245104: M102.987; 265113: M102.987
215109	8	245106									225104: M102.981;215109: M102.987;245106: M102.981
215180	12	235110									215180:(ELV)
215181											215181:(ALV)
	12	235110									
					10	265118					
					8	265113					
					10	265118					
					8	265113					
					12	265113					
215101					24	265150					215101:(ELV)
215102											215102:(ALV)
					24	265150					265150: M104.996
	8	245110 [6]			16	265102					245110:(ELV), (-ZAS); 265102:(ELV)
	8	245111 [6]			8	265104					245111:(ELV); 265104:(ALV)
	8	245112 [6]									245112:(ALV)
	8	245110 [6]			16	265102					245110:(ELV), M113.962, (-ZAS); 265102:(ELV), M113.962
	8	245111 [6]			8	265104					245111:(ELV), M113.962; 265104:(ALV), M113.962
	8	245112 [6]									245112:(ALV), M113.962
					12	265118					

215501											215501: F8M730
215501											215501: F8M730
215912											
215542	8	245535									
					16	265501					
215519											215519: F8Q706
215520											215520: F8Q742
					16	265501					
215520											
215519											215519: F8Q706
215520											215520: F8Q742
215520					8	265907					
215542	8	245535									
215542	8	245535									

6 siehe Klappseite vorn • see fold in front.

RUVILLE
YOUR PARTNER

		cm³			
Renault					
25					
2.1 D	J8S736; (51kW)	2068	06.89-12.92	225542	
30					
2.1 TD	J8S702; (63kW)	2068	02.82-03.86	225542	
AVANTIME					
2.0 16V TURBO	F4R760; F4R761; (120kW)	1998	11.01-05.03		
3.0 V6	L7X720; L7X721; (152kW)	2946	09.01-05.03		
CLIO (KR0/1_)					
1.6 16V; 2.0 16V Sport	K4M800; K4M801; K4M862; (82kW-148kW)	1598-1998	02.08-		
CLIO I					
1.8; Williams	F7P722; F7R700; (99kW-108kW)	1764-1998	01.91-09.98		
CLIO II					
1.4 16V	K4J700; K4J710; K4J711; K4J712; K4J713; (70kW-72kW)	1390	10.99-		
1.6	K7M744; K7M745; (66kW)	1598	09.98-05.05		
1.6 16V	K4M708; K4M744; K4M745; K4M748; (79kW)	1598	09.98-		
2.0 16V Sport	F4R730; F4R738; (124kW-132kW)	1998	02.00-		
CLIO III					
1.4 16V; 1.6 16V; 1.6 16V GT; 2.0 16V; 2.0 16V Sport	F4R830; K4J780; K4M800; K4M801; K4M804; K4M862; M4R700; M4R701; (65kW-148kW)	1390-1998	06.05-		
ESPACE III					
2.0	F3R728; F3R729; F3R742; F3R768; F3R769; (84kW)	1998	11.96-10.00		
2.0; 2.0 16V	F4R700; F4R701; (102kW-103kW)	1998	10.98-10.02		
3.0 V6	L7X727; (140kW)	2946	10.98-10.02		
ESPACE IV					
2.0; 2.0 TURBO	F4R790; F4R791; F4R792; F4R794; F4R795; F4R796; F4R797; F4R897; (100kW-125kW)	1998	11.02-		
2.0 dCi	M9R740; M9R760; (96kW-127kW)	1995	01.06-		
EXPRESS					
1.6 D	F8M720; F8M730; F8M736; F8M760; (40kW)	1596	03.86-08.98		
FLUENCE					
1.6 16V; 2.0 16V	(81kW-103kW)	1598-1998	02.10-		
GRAND SCÉNIC					
1.6; 1.6 16V; 2.0	F4R770; F4R771; F4R776; K4M761; K4M782; K4M9766; (82kW-120kW)	1598-1998	04.04-		
2.0 dCi	M9R610; M9R615; M9R700; M9R721; (110kW-118kW)	1995	09.05-		
KANGOO					
1.6	K7M750; (64kW)	1598	02.08-		
1.6; 1.6 16V; 1.6 16V Hi-Flex	K4M750; K4M752; K4M753; K4M830; (70kW-78kW)	1598	06.01-		
KOLEOS					
2.0 dCi	M9R830; M9R832; (110kW-130kW)	1995	09.08-		
LAGUNA (B56_,K56_)					
1.6 16V; 1.8 16V	F4P760; K4M720; K4M724; (79kW-88kW)	1598-1783	11.97-03.01		
2.0 16V	N7Q700; N7Q704; (102kW)	1948	06.95-03.01		
2.0	F3R768; (84kW)	1998	06.95-02.01		
2.0 16V; 2.0 16V (A56A/B)	F4R780; (103kW)	1998	09.99-03.01		
2.9 24V	L7X700; L7X701; (140kW)	2946	03.97-03.01		
2.2 D	G8T706; G8T752; G8T790; G8T794; (61kW)	2188	11.93-03.01		
LAGUNA (DT0/1)					
2.0 16V Turbo; 2.0 GT	F4R811; F4RT800; F4RT811; (125kW-150kW)	1998	03.08-		
2.0 dCi; 2.0 dCi GT	M9R816; M9RA742; M9RK802; M9RK805; M9RK806; M9RK816; (110kW-131kW)	1995	10.07-		
3.0 dCi	M9R891; (173kW)	2998	09.08-		
LAGUNA II (BG0/1_/KG0/1_)					
1.6 16V	K4M710; K4M711; K4M714; (79kW)	1598	03.01-		
1.6 16V; 1.8 16V; 2.0 16V; 2.0 16V IDE; 2.0 16V TURBO	F4P770; F4P771; F4P773; F4P774; F4P775; F4R712; F4R713; F4R714; F4R715; F4R764; F4R765; F4R784; F4R786; F4R787; F4R886; F4R887; F5R700; K4M716; (82kW-150kW)	1598-1998	03.01-		

RUVILLE YOUR PARTNER

Renault

215542	8	245535									
215542	8	245535									
	16	235501			16	265503					
	16	235500 [6]									
					24	265905					
	16	235501			16	265503					
	16	235500 [6]									
					16	265501					
	16	235501			16	265503			1	295501(N)	
	16	235500 [6]									
215507											
	16	235501			16	265503			1	295501(N)	
	16	235500 [6]									
	16	235501			16	265503					
	16	235500 [6]									
	16	235501			16	265503					
	16	235500 [6]									
215509											
	16	235501			16	265503					
	16	235500 [6]									
					24	265901					
	16	235501			16	265503					
	16	235500 [6]									
	16	235502			16	265165					
215501											215501: F8M730
	16	235501			16	265503					
	16	235500 [6]									
	16	235501			16	265503					
	16	235500 [6]									
	16	235502			16	265165					
215507											
	16	235501			16	265503					
	16	235500 [6]									
	16	235502			16	265165					
	16	235501			16	265503					
	16	235500 [6]									
					16	266505					
215509											
	16	235501			16	265503					
	16	235500 [6]									
					24	265901					
					12	265907					265907: G8T706, G8T752
	16	235501			16	265503					
	16	235500 [6]									
	16	235502			16	265165					
	24	235502			24	265716					235502: V9X891; 265716: V9X891
	16	235501			16	265503			1	295501(N)	
	16	235500 [6]									
	16	235501			16	265503					
	16	235500 [6]									

6 siehe Klappseite vorn • see fold in front.

		cm³			
LAGUNA II (BG0/1_/KG0/1_)					
3.0 V6 24V	L7X731; (152kW)	2946	03.01-		
2.0 dCi	M9R740; M9R760; (110kW-127kW)	1995	08.05-		
LAGUNA III (BT0/1, KT0/1)					
1.6 16V; 2.0 16V; 2.0 16V TURBO; 2.0 GT	F4R800; F4R811; K4M824; M4R704; (81kW-150kW)	1598-1998	10.07-		
2.0 dCi; 2.0 dCi GT	M9R740; M9R744; M9R746; M9R748; M9R800; M9R802; M9R809; M9R816; M9RA742; M9RK802; M9RK805; (96kW-131kW)	1995	10.07-		
3.0 dCi	M9R891; (173kW)	2998	09.08-		
LOGAN (KS_, LS_)					
1.6	K7M710; (64kW)	1598	09.04-		
1.6	K4M690; K7M690; (77kW)	1598	04.07-		
MASTER II					
2.8 dT; 2.8 dTI	S9W702; (84kW)	2799	07.98-10.01		
MEGANE CC					
2.0 dCi	(118kW)	1995	06.10-		
MEGANE I					
1.4 16V	K4J714; K4J750; (70kW)	1390	03.99-		
1.6 e	K7M702; K7M703; K7M790; (66kW)	1598	01.96-		
1.6 16V	K4M700; K4M701; K4M704; K4M708; (79kW)	1598	03.99-		
1.8 16V	F4P720; F4P722; (85kW)	1783	01.01-		
2.0i	F3R750; F3R751; F3R752; F3R791; F3R796; (80kW-84kW)	1998	01.96-		
2.0 16V; 2.0 16V IDE	F4R770; F5R740; (102kW-103kW)	1998	11.99-		
2.0 16V	F7R710; F7R714; (108kW)	1998	03.96-		
1.9 dT; 1.9 TD	F8Q784; F8Q786; (66kW)	1870	01.96-		
1.9 dTi	F9Q731; F9Q736; (72kW)	1870	03.99-02.01		
MEGANE II					
1.4; 1.4 16V; 1.6; 1.6 16V; 1.6 Flex-Fuel; 2.0; 2.0 16V; 2.0 16V TURBO; 2.0 Renault Sport	F4R770; F4R771; F4R774; F4R776; F4RT774; K4J730; K4J740; K4M760; K4M761; K4M762; K4M788; K4M812; K4MC813; K4MD812; (72kW-165kW)	1390-1998	11.02-		
2.0 dCi; 2.0 DCi Dynamic	M9R700; M9R722; M9R724; (110kW-127kW)	1995	09.05-		
MEGANE III (BZ0_, DZ0_, KZ0/1)					
1.6 16V; 1.6 16V (BZ0U); 1.6 16V (DZ0U); 1.6 16V (KZ0H); 1.6 16V (KZ0U, KZ1B); 1.6 16V Bifuel; 1.6 16V Bifuel (KZ03); 2.0 16V; 2.0 16V (KZ0K)	F4R870; K4M858; (74kW-132kW)	1598-1998	11.08-		
2.0 dCi; 2.0 dCi (KZ0L)	M9R610; M9R615; (110kW-118kW)	1995	04.09-		
MODUS					
1.4; 1.6	K4J770; K4M790; K4M791; K4M792; K4M794; (65kW-82kW)	1390-1598	12.04-		
RAPID					
1.6 D	F8M720; F8M730; F8M736; F8M760; (40kW)	1596	03.86-08.98		
SAFRANE II					
2.0 16V	N7Q710; N7Q711; (100kW)	1948	07.96-12.00		
2.5 20V	N7U700; N7U701; (121kW)	2435	07.96-12.00		
2.9 24V	L7X713; (140kW)	2946	03.99-12.00		
2.2 TD	G8T740; (83kW)	2188	07.96-12.00		
SCÉNIC					
1.4 16V; 1.6 16V	K4J714; K4J750; K4M700; K4M701; K4M704; K4M708; (70kW-79kW)	1390-1598	09.99-08.03		
1.6 16V; 1.8 16V; 2.0	F4P720; F4P722; F4R740; F4R741; K4M9766; (82kW-102kW)	1598-1998	07.00-		
2.0 16V IDE; 2.0 RX4	F4R740; F4R741; F4R744; (102kW-103kW)	1998	09.99-08.03		
2.0 dCi	M9R610; M9R615; (110kW-118kW)	1995	02.09-		
SCÉNIC I					
1.4 16V; 1.6 16V	K4J714; K4J750; K4M700; K4M701; K4M704; K4M708; (70kW-79kW)	1390-1598	09.99-08.03		
1.8 16V; 2.0	F4P720; F4P722; F4R740; F4R741; (85kW-102kW)	1783-1998	07.00-08.03		
2.0 16V IDE; 2.0 RX4	F4R740; F4R741; F4R744; (102kW-103kW)	1998	09.99-08.03		

RUVILLE YOUR PARTNER

Renault

					24	265905					
	16	235502			16	265165					
	16	235501			16	265503					
	16	235500 [6]									
	16	235502			16	265165					
	24	235502			24	265716					235502: V9X891; 265716: V9X891
215507											
215507											215507: K7M690
215801											
	16	235502			16	265165					
	16	235501			16	265503			1	295501(N)	
	16	235500 [6]									
215507											
	16	235501			16	265503			1	295501(N)	
	16	235500 [6]									
	16	235501			16	265503					
	16	235500 [6]									
215509											
	16	235501			16	265503					
	16	235500 [6]									
					16	266401					
215502											215502: F8Q610, F8Q768, F8Q786, F8Q784, Vgl.-Nr.7700872299
215503											215503: F8Q610, F8Q768, F8Q784, F8Q786, Vgl.-Nr.7700101020
215506											215506:Vgl.-Nr.7700107373
215508											215508: F9Q731
	16	235501			16	265503					
	16	235500 [6]									
	16	235502			16	265165					
	16	235501			16	265503					
	16	235500 [6]									
	16	235502			16	265165					
	16	235501			16	265503					
	16	235500 [6]									
215501											215501: F8M730
					16	266505					
					20	266505					
					24	265901					
					12	265907					
	16	235501			16	265503			1	295501(N)	
	16	235500 [6]									
	16	235501			16	265503					
	16	235500 [6]									
	16	235501			16	265503			1	295901(N)	
	16	235500 [6]									
	16	235502			16	265165					
	16	235501			16	265503			1	295501(N)	
	16	235500 [6]									
	16	235501			16	265503					
	16	235500 [6]									
	16	235501			16	265503			1	295901(N)	
	16	235500 [6]									

6 siehe Klappseite vorn • see fold in front.

		cm³			
Renault					
SCÉNIC II					
1.4; 1.6; 1.6 16V; 2.0; 2.0 16V TURBO	F4R770; F4R771; F4R776; K4J730; K4J740; K4M761; K4M782; K4M788; K4M812; K4M9766; K4MC813; (72kW-120kW)	1390-1998	06.03-		
2.0 dCi	M9R700; M9R721; (110kW)	1995	09.05-		
SPORT SPIDER					
2.0 16V	F7R710; (110kW)	1998	03.95-10.99		
SUPER 5					
1.6 D	F8M720; F8M730; (40kW)	1596	08.85-12.96		
TRAFIC (P6,T1 - T7)					
2.1 D	852750; (43kW)	2068	03.80-04.89	225542	
TRAFIC (PXX,TXW,TXX)					
2.1 D	852720; 852750; (43kW)	2068	05.89-06.94	225542	
TRAFIC II (EL,FL,JL)					
2.0; 2.0 (ELOA); 2.0 16V	F4R720; F4R722; F4R820; (86kW-88kW)	1998	03.01-		
2.0 dCi	M9R780; M9R782; (66kW-84kW)	1995	08.06-		
TWINGO					
1.6 RS	K4M754; K4M854; (98kW)	1598	05.08-		
VEL SATIS (BJ0)					
2.0 16 V TURBO; 2.0 16V TURBO	F4R762; F4R763; F4R766; F4R767; (120kW-125kW)	1998	06.02-		
2.0 dCi	M9R760; (110kW-127kW)	1995	08.05-		
WIND					
1.6	(98kW)	1598	07.10-		
Rover					
75					
2.0 CDT; 75 2.0 CDT	M47R; (85kW)	1950	02.99-		
100 (METRO) (XP)					
111 C,L,S; 114 S/L/GTA	11K2A; 11K2D; 14K2A; 14K2D; (44kW-55kW)	1119-1396	03.90-12.98		
114 GSi; 114 GTI/GT 16V; 114 GTI 16V	14K4C; 14K4D; 14K4F; (66kW-76kW)	1396	03.90-12.98		
114 D	TUD3; (38kW)	1361	10.92-12.94		
115 D	TUD5; (42kW)	1527	12.94-12.98		
100 (XP)					
111; 114	11K2D; 14K2A; 14K2D; (44kW-55kW)	1119-1396	04.94-		
114	14K4F; (75kW)	1396	03.97-10.98		
200 (XW)					
214	14K2A; 14K2D; (55kW)	1396	09.93-10.95		
214 1.4; 214 1.4i 16V; 214 GSi/Si; 214 Si/Gsi; 216; 216 1.6i; 216 GTi; 220 GSi; 220 GTi; 220 TURBO	14K4C; 14K4D; 14K4F; 20T4G; 20T4H; D16A8; (66kW-147kW)	1396-1994	10.89-11.99		
218 TD	XUD7TE; (65kW)	1769	09.91-10.95		
200 II (RF)					
214 Si	14K4F; (76kW)	1396	11.95-03.00		
400 (RT)					
414 Si; 416 Si; 420 Si Lux	14K4F; 16K4F; 20T4H; D16Y2; (76kW-100kW)	1396-1994	05.95-03.00		
400 (XW)					
1.6i TOURER; 2.0i TOURER; 414; 414 GSi,Si; 416 GTI; 420 Gsi/Sli/Gti/VITESSE; 420 Gti/Gsi/VITESSE; 420 TURBO	14K4C; 14K4D; 14K4F; 20M4F; 20T4G; 20T4H; D16A8; D16Z2; (66kW-147kW)	1396-1994	04.90-11.98		
1.8 D TOURER; 418 SLD/GSD	XUD7TE; (65kW)	1769	09.91-11.98		
600 (RH)					
620 Ti VITESSE	20T4G; (147kW)	1994	07.94-02.99		
800					
820 Si (XS)	20HDM16; (98kW)	1994	10.88-12.91		
820i/Si (RS); 820i/Si (XS)	20T4H; (100kW)	1996	01.92-02.99		
820 16V TURBO (RS)	T16; (132kW)	1996	01.92-02.99		
Saab					
9-3					
1.8 i	Z18XE; (90kW)	1796	01.04-		
2.0 SE TURBO; 2.0 TURBO; 2.0i	B204E; B204I; B204L; B204R; B205E; B205L; B205R; (96kW-151kW)	1985	02.98-08.03		
1.8 t; 1.8 t BioPower; 2.0 t; 2.0 t BioPower; 2.0 T XWD; 2.0 Turbo XWD	B207E; B207L; B207R; (110kW-154kW)	1998	09.02-		
2.3i	B234I; B235R; (110kW-165kW)	2290	02.98-08.03		
2.8 Turbo V6; 2.8 Turbo V6 XWD	(184kW-206kW)	2792	03.05-		

RUVILLE YOUR PARTNER

Renault → Saab

	16	235501			16	265503					
	16	235500 [6]									
	16	235502			16	265165					
					16	265501					
215501											215501: F8M730
215542	8	245535									
215542	8	245535									
	16	235501			16	265503					
	16	235500 [6]									
	16	235502			16	265165					
	16	235501			16	265503					
	16	235500 [6]									
	16	235501			16	265503					
	16	235500 [6]									
	16	235502			16	265165					
	16	235501			16	265503					
	16	235500 [6]									

	16	235003			16	265002					
	16	235000 [6]									
					8	265805					
					16	265805					
215901					8	265898					
215901					8	265898			1	295907(N)	
					8	265805					
					16	265805					
					8	265805					
					16	265805					
215902									1	295912(N)	
					16	265805					
					16	265805					
					16	265805					
215902									1	295912(N)	
					16	265805					
					16	266401					
					16	265805					
					16	265805					265805: 230967→

					16	265302					
					16	266402					
					16	265330					
					16	266402					
	24	235301			24	265330					

6 siehe Klappseite vorn • see fold in front.

		cm³			
9-3					
2.8 Turbo V6 XWD	(206kW)	2792	05.08-		
2.8 T; 2.8 TURBO	(184kW)	2796	03.05-		
1.9 TiD	Z19DT; (88kW)	1910	09.04-		
1.9 TiD	Z19DTH; (110kW)	1910	09.04-		
1.9 TTiD	(132kW)	1910	12.07-		
2.2 TiD	D223L; X22DTH; (85kW-92kW)	2171	02.98-		
9-3X					
2.0 T; 2.0 T BioPower	B207R; (154kW)	1998	02.09-		
1.9 TTiD	(132kW)	1910	02.09-		
9-5					
2.0; 2.0 t; 2.0 t BioPower; 2.3 t; 2.3 t BioPower; 2.3 Turbo; 2.3i	B205E; B205L; B235E; B235L; B235R; (110kW-191kW)	1985-2290	09.97-		
3.0 V6t	B308E; (147kW)	2962	01.98-		
1.9 TiD	Z19DTH; (110kW)	1910	01.06-		
2.2 TiD	D223L; (88kW)	2171	03.02-		
900 I					
2.0 S TURBO-16; 2.0 TURBO; 2.0 TURBO-16; 2.0 TURBO-16 S; 2.0-16	B201S; B202I; B202S; B202XL; BSI20; (93kW-129kW)	1985	09.78-06.94		
2.1-16	B212I; (100kW)	2119	08.90-06.94		
900 II					
2.0-16 TURBO; 2.0i; 2.3-16	B204I; B204L; B206I; B234I; (96kW-136kW)	1985-2290	07.93-02.98		
2.5-24 V6	B258I; (125kW)	2498	07.93-02.98		
9000					
2.0-16; 2.0-16 CD; 2.0-16 CS; 2.0-16 ND TURBO; 2.0-16 TURBO; 2.0-16 TURBO CD; 2.0-16 TURBO CS; 2.3-16 AERO CS; 2.3-16 CD; 2.3-16 CDE; 2.3-16 CDE ECO-POWER; 2.3-16 CDE TURBO; 2.3-16 CS; 2.3-16 CSE; 2.3-16 CSE ECO POWER; 2.3-16 TURBO; 2.3-16 TURBO CS; 2.3-16 TURBO CSE	B202; B202I; B202L; B202S; B202XI; B202XL; B204E; B204I; B234E; B234I; B234L; B234R; (92kW-165kW)	1985-2290	09.84-12.98		
3.0 -24 V6 CD/CDE; 3.0 -24 V6 CS/CSE	B308I; (155kW)	2962	07.94-12.98		

Seat

ALHAMBRA (7V8, 7V9)					
1.8 T 20V	AJH; AWC; (110kW)	1781	10.97-		
2.0i	ADY; ATM; (85kW)	1984	04.96-		
2.8 V6	AYL; (150kW)	2792	06.00-		
1.9 TDI	1Z; AHU; ANU; (66kW)	1896	04.96-	225403	
1.9 TDI	AFN; AVG; (81kW)	1896	08.96-06.00	225403	
1.9 TDI	AUY; BVK; (85kW)	1896	06.00-		
1.9 TDI	ASZ; (96kW)	1896	11.02-		
1.9 TDI	ARL; BTB; (110kW)	1896	05.05-		
2.0 TDI	BRT; (103kW)	1968	11.05-		
ALTEA (5P1, 5P5)					
1.2 TSI	CBZB; (77kW)	1197	04.10-		
1.4	BXW; (63kW)	1390	05.06-		
1.4 TSI	CAXC; (92kW)	1390	11.07-		
1.6; 1.6 Multifuel	BGU; BSE; BSF; CCSA; (75kW)	1595	03.04-		
1.8 TFSI	BYT; BZB; CDAA; (118kW)	1798	01.07-		
2.0 FSI; 2.0 TFSI	BLR; BLY; BVY; BVZ; BWA; (110kW-147kW)	1984	05.04-		
1.6 TDI	CAYC; (77kW)	1598	10.09-		
1.9 TDI	BXF; (66kW)	1896	08.09-		

RUVILLE YOUR PARTNER

Saab → Seat

	24	235301			24	265330					235301: B284R; 265330: B284R
	24	235301			24	265330					
					8	265802					265802: Z19DT
	16	235302			16	265809					235302: 17180895→; 265809: 17180895→
	16	235302			16	265809					235302: Z19DTR; 265809: Z19DTR
					16	265302					
					16	265330					
	16	235302			16	265809					
					16	266402					
					24	265302					
	16	235302			16	265809					235302: 17180895→; 265809: →17180894
											265809: →4741639
					16	265302					265302: →2..., →12.02
					16	266402					
					16	266401					266401:→01.93
					16	266402					
					24	265309					
					16	266402					
					24	265309					

					12	265704			2	295401(N)	265704:(ELV)
					8	265705					265705:(ALV)
					8	265426			1	295401(N)	265426: ADY, →000778; 295401(N): ATM
					8	265427			1	295405(N)	265427: ADY, 000779→; 295405(N): ADY
									1	295404(K)	265427: ATM; 295404(K):(GS), ADY
									1	295405(K)	295404(K):(GS), AEB, ARK
									1	295406(K)	295405(K):(ST), ADY
											295406(K):(GS), ADY, (mG)
											295406(K):(GS), AEB, ARK, (mG)
	24	235701			24	265703					
215409					8	265401			1	295401(N)	225403: 1Z, AHU; 215409: 1Z, AHU; 265401: ANU, →5#525000; 295401(N): ANU
					8	265403			1	295405(N)	265403: ANU, 6#500001→; 295405(N): AHU, 1Z
					8	265426			1	295404(K)	265426: 1Z, AHU; 295404(K):(GS), 1Z, AHU
									1	295405(K)	295405(K):(ST), 1Z, AHU
									1	295406(K)	295406(K):(GS), 1Z, AHU, (mG)
215409					8	265426			1	295405(N)	
									1	295404(K)	295404(K):(GS), AFN, →576000
									1	295405(K)	295405(K):(ST)
									1	295406(K)	295406(K):(GS), AFN, →576000, (mG)
215404					8	265401			1	295401(N)	215404: AUY; 265401: →5#525000
					8	265403					265403: 6#500001→
215404					8	265401			1	295401(N)	265401: →5#525000
					8	265403					265403: 6#500001→
215404					8	265403					265403: BTB
					8	265403					
					8	265402					
	16	235410			16	265402					
	16	235400 [6]									
	16	235404			16	265402					
	8	235409			8	265165			1	295401(N)	
	8	235402 [6]									
	16	235700			16	265707					
	16	235408			16	265165					
	16	235406			16	265404					
					8	265403					

6 siehe Klappseite vorn • see fold in front.

		cm³			
ALTEA (5P1, 5P5)					
1.9 TDI	BJB; BKC; BLS; BXE; (77kW)	1896	04.04-		
2.0 TDI; 2.0 TDI 16V	AZV; BKD; (100kW-103kW)	1968	03.04-		
2.0 TDI	BMM; (103kW)	1968	11.05-		
2.0 TDI	BMN; CEGA; (125kW)	1968	03.06-		
AROSA (6H)					
1.0	AER; ALD; ALL; ANV; AUC; (37kW)	999	05.97-06.04		
1.4	AEX; AKK; AKV; ANW; APQ; AUD; (44kW)	1390	05.97-06.04		
1.4 16V	AFK; ANM; AQQ; AUB; (74kW)	1390	01.00-06.04		
1.4 TDI	AMF; (55kW)	1422	01.00-06.04		
1.7 DI	AKU; (44kW)	1716	08.97-06.04	225404	
CORDOBA					
1.0	ALD; ANV; AUC; (37kW)	999	05.99-09.02		
1.0	AST; AVZ; (51kW)	999	05.00-09.02		
1.4	AKK; ANW; AUD; (44kW)	1390	05.99-09.02		
1.4	APE; AUA; (55kW)	1390	05.99-09.02		
1.4	AQQ; AUB; (74kW)	1390	02.00-09.02		
1.6; 1.6 SXE	1F; AEH; AKL; APF; AUR; (55kW-74kW)	1595	07.96-09.02		
1.6 i	AFT; (74kW)	1595	07.96-06.99		
1.6	ALM; (55kW-75kW)	1598	05.99-12.03		
1.8	AQX; AYP; (115kW)	1781	12.99-09.02		
2.0	2E; ABF; AGG; (85kW-110kW)	1984	11.95-04.99		
1.9 D	AGP; AQM; (50kW)	1896	05.99-09.02		
1.9 D	1Z; AHU; (66kW)	1896	07.96-04.99		
1.9 D	AGR; ALH; ASV; (66kW-81kW)	1896	05.99-09.02		
CORDOBA (6K2/C2)					
1.0i	AER; (37kW)	999	09.96-06.99		
1.0 CL; 1.3	2G; AAU; AAV; (33kW-40kW)	1043-1272	02.93-06.96		
1.4i	ABD; AEX; AKV; ANX; APQ; (44kW)	1390	06.94-06.99		
1.4i 16V	AFH; (74kW)	1390	09.96-06.99		
1.6 i	1F; (55kW)	1595	05.94-06.99		

RUVILLE YOUR PARTNER

Seat

215404					8	265403					215404: BXE; BKC; BJB
215421											215421:(ELV)
215422											215422:(ALV)
					8	265403					
215421	16	235406			16	265404					215421: BMN, (ELV); 235406: CEGA; 265404: CEGA
215423											215423: BMN, (ALV)
	8	235455			8	265402			1	295403(N)	235455: ALD, ANV, AUC; 265402: ALD, ANV, AUC; 295403(N): ANV, ALD, AUC
	8	235453 [6]			8	265427			1	295405(N)	235453: ALD, ANV, AUC; 265427: AER, ALL; 295405(N): AER, ALL
									1	295403(K)	295403(K):(ST), AER, 220084→
									1	295404(K)	295403(K):(ST), ALL, ANV, AUC, ALD
									1	295405(K)	295404(K):(GS), AER, →220083
									1	295406(K)	295405(K):(ST), AER, →220083
											295406(K):(GS), AER, →220083, (mG)
	8	235455			8	265402			1	295403(N)	235455: AKK, ANW, AUD; 265402: AKK, ANW, AUD; 295403(N): AUD, AKK, ANW
	8	235453 [6]			8	265427			1	295405(N)	235453: AKK, ANW, AUD; 265427: AEX, APQ, AKV; 295405(N): AEX, AKV, APQ
									1	295403(K)	295403(K):(ST), AEX, AKV, AEX908122→, AKV095009→
									1	295404(K)	295403(K):(ST), AUD, APQ, ANW, AKK
									1	295405(K)	295404(K):(GS), AEX, AKV, →AEX908121, →AKV095008
									1	295406(K)	295405(K):(ST), AEX, AKV, →AEX908121, →AKV095009
											295406(K):(GS), AEX, AKV, →AEX908121, →AKV095008, (mG)
	16	235410			16	265402			1	295402(N)	235410: AQQ; AUB; AFK; 265402: AQQ; AUB; AFK; 295402(N): AFK, AUB
	16	235400 [6]									235400: AQQ; AUB; AFK
215406					6	265403			1	295401(N)	
									1	295404(K)	295404(K):(GS)
									1	295406(K)	295406(K):(GS), (mG)
215411					8	265426			1	295405(N)	
									1	295404(K)	295404(K):(GS), AKU, →013000
									1	295405(K)	295405(K):(ST)
									1	295406(K)	295406(K):(GS), AKU, →013000, (mG)
					8	265402					
					16	265416					
					8	265402					
	16	235410			16	265402					
	16	235410			16	265402					235410: AUB; 265402: AUB
	16	235400 [6]									235400: AUB
					8	265427					
215424					8	265427					
					8	265427					
					12	265704					265704:(ELV)
					8	265705					265705:(ALV)
					8	265427					
					8	265427					
					8	265426					
					8	265427					
					8	265427			1	295405(N)	
									1	295404(K)	295404(K):(GS), →220083
									1	295405(K)	295405(K):(ST)
									1	295406(K)	295406(K):(GS), →220083, (mG)
					8	265427					
					8	265427			1	295405(N)	
									1	295403(K)	295403(K):(ST), AEX, AKV, AEX908122→, AKV095009→
									1	295404(K)	295403(K):(ST), ANX, APQ
									1	295405(K)	295404(K):(GS), ABD
									1	295406(K)	295404(K):(GS), AEX, AKV, →AEX908121, →AKV095008
											295405(K):(ST), ABD
											295405(K):(ST), AEX, AKV, →AEX908121, →AKV095009
											295406(K):(GS), ABD, (mG)
											295406(K):(GS), AEX, AKV, →AEX908121, →AKV095008, (mG)
					16	265416			2	295405(N)	
									1	295404(K)	295404(K):(GS), →030001
									1	295405(K)	295405(K):(ST)
									1	295406(K)	295406(K):(GS), →030001, (mG)
215425					8	265427					

6 siehe Klappseite vorn • see fold in front.

		cm³			
CORDOBA (6K2/C2)					
1.6i	AFT; (74kW)	1595	07.96-06.99		
1.6i	ABU; AEE; ALM; (55kW)	1598	02.93-06.99		
1.8i	ABS; ADZ; (66kW)	1781	02.93-06.99		
1.8i 16V	ADL; (95kW)	1781	10.93-08.96		
2.0i	2E; AGG; (85kW)	1984	02.93-06.99		
2.0i 16V	ABF; (110kW)	1984	08.96-06.99		
1.7 SDI	(44kW)	1716	07.97-06.99		
1.9 D	1Y; (47kW)	1896	01.96-08.96	225419	
1.9 SDI	AEY; (47kW)	1896	08.96-06.99	225404	
1.9 D	1Y; (50kW)	1896	02.93-08.96	225419	
1.9 TD	AAZ; (55kW)	1896	02.93-08.96	225419	
1.9 TDI	1Z; AHU; (66kW)	1896	08.96-06.99	225403	
1.9 TDI	AFN; (81kW)	1896	03.97-06.99	225403	
CORDOBA (6K5)					
1.4i	AEX; AKV; ANX; APQ; (44kW)	1390	09.96-06.99		
1.4	AKK; ANW; AUD; (44kW)	1390	06.99-12.02		
1.4 16V	APE; AUA; (55kW)	1390	06.99-12.02		
1.4	AQQ; AUB; (74kW)	1390	02.00-12.02		
1.6 i	1F; (55kW)	1595	05.97-06.99		

RUVILLE YOUR PARTNER

Seat

215424					8	265427			1	295404(K)	295404(K):(GS)
									1	295405(K)	295405(K):(ST)
									1	295406(K)	295406(K):(GS), (mG)
					8	265427			1	295405(N)	
									1	295403(K)	295403(K):(ST), AEE, ALM, AEE562758→, ALM000707→
									1	295404(K)	295404(K):(GS), 1F, ABU
									1	295405(K)	295404(K):(GS), AEE, →562757
									1	295406(K)	295405(K):(ST), 1F, ABU
											295405(K):(ST), AEE, ALM, →AEE562757, →ALM000706
											295406(K):(GS), 1F, ABU, (mG)
											295406(K):(GS), AEE, →562757, (mG)
					8	265427			1	295405(N)	265427: ABS, 935646→
									1	295404(K)	265427: ADZ, 001110→; 295404(K):(GS)
									1	295405(K)	295405(K):(ST)
									1	295406(K)	295406(K):(GS), (mG)
					16	265427					
215424					8	265426			1	295405(N)	215424: AGG; 265426: 2E, →565664
					8	265427			1	295404(K)	265427: 2E, 565665→; 295404(K):(GS)
									1	295405(K)	265427: AGG; 295405(K):(ST)
									1	295406(K)	295406(K):(GS), (mG)
					16	265427			1	295405(N)	
									1	295404(K)	295404(K):(GS)
									1	295405(K)	295405(K):(ST)
									1	295406(K)	295406(K):(GS), (mG)
					8	265426					265426: AKU
215419					8	265426			1	295405(N)	225419: 6KV000001→; 215419: 6KV000001→; 265426: 6KV000001→
					8	265427			1	295404(K)	265427: →6KT284000; 295404(K):(GS)
									1	295405(K)	295405(K):(ST)
									1	295406(K)	295406(K):(GS), (mG)
215411					8	265426			1	295405(N)	
									1	295404(K)	295404(K):(GS), AEF, →265000
									1	295405(K)	295404(K):(GS), AEY, →050000
									1	295406(K)	295405(K):(ST)
											295406(K):(GS), AEF, →265000, (mG)
											295406(K):(GS), AEY, →050000, (mG)
215419					8	265426			1	295405(N)	225419: 6KV000001→; 215419: 6KV000001→; 265426: 6KV000001→
					8	265427			1	295404(K)	265427: →6KT284000; 295404(K):(GS)
									1	295405(K)	295405(K):(ST)
									1	295406(K)	295406(K):(GS), (mG)
215419					8	265426			1	295405(N)	225419: 6KV000001→; 215419: 6KV000001→; 265426: 6KV000001→; 295405(N): 6KV000001→
					8	265427			1	295404(K)	265427: →6KT284000; 295404(K):(GS)
									1	295405(K)	295405(K):(ST)
									1	295406(K)	295406(K):(GS), (mG)
215409					8	265426			1	295405(N)	
									1	295404(K)	295404(K):(GS)
									1	295405(K)	295405(K):(ST)
									1	295406(K)	295406(K):(GS), (mG)
215409					8	265426			1	295405(N)	
									1	295404(K)	295404(K):(GS), AFN, →576000
									1	295405(K)	295405(K):(ST)
									1	295406(K)	295406(K):(GS), AFN, →576000, (mG)
					8	265427			1	295405(N)	
									1	295403(K)	295403(K):(ST), AEX, AKV, AEX908122→, AKV095009→
									1	295404(K)	295403(K):(ST), ANX, APQ
									1	295405(K)	295404(K):(GS), AEX, AKV, →AEX908121, →AKV095008
									1	295406(K)	295405(K):(ST), AEX, AKV, →AEX908121, →AKV095009
											295406(K):(GS), AEX, AKV, →AEX908121, →AKV095008, (mG)
	8	235455			8	265402			1	295403(N)	295403(N): AUD, AKK, ANW
	8	235453 [6]							1	295405(N)	295405(N): AEX, AKV, APQ
									1	295403(K)	295403(K):(ST)
	16	235410			16	265402			1	295402(N)	
	16	235400 [6]									
	16	235410			16	265402					235410: AUB; 265402: AUB
	16	235400 [6]									235400: AUB
215425					8	265427			1	295405(N)	
									1	295403(K)	295403(K):(ST), AEE, 562758→
									1	295404(K)	295403(K):(ST), ALM, 000707→
									1	295405(K)	295404(K):(GS), 1F

6 siehe Klappseite vorn • see fold in front.

		cm³			

Seat

CORDOBA (6K5)					
1.6 i	1F; (55kW)	1595	05.97-06.99		
1.6i	AFT; (74kW)	1595	09.96-06.99		
1.6	AEH; AKL; APF; AUR; (74kW)	1595	06.99-12.02		
1.6; 1.6i	AEE; ALM; (55kW)	1598	09.96-12.02		
1.7 SDI	(44kW)	1716	07.97-06.99		
1.9 SDI	AEY; (47kW)	1896	09.96-06.99	225404	
1.9 SDI	AGP; AQM; (50kW)	1896	06.99-12.02		
1.9 TDI	1Z; AHU; (66kW)	1896	08.96-06.99	225403	
1.9 TDI	AGR; ALH; (66kW)	1896	06.99-12.02		
1.9 TDI	AFN; (81kW)	1896	07.97-06.99	225403	
1.9 TDI	ASK; ASV; (81kW)	1896	06.99-12.02		
CORDOBA (6K2)					
1.0	ALD; ANV; AUC; (37kW)	999	06.99-10.02		
1.0 16V	AST; AVZ; (51kW)	999	05.00-10.02		
1.4	AKK; ANW; AUD; (44kW)	1390	06.99-10.02		
1.4 16V	APE; AQQ; AUA; AUB; (55kW-74kW)	1390	02.00-10.02		
1.6	AEH; AKL; APF; AUR; (74kW)	1595	06.99-10.02		
1.6	ALM; (55kW)	1598	06.99-10.02		
1.8 T 20V	AQX; AYP; (115kW)	1781	07.00-10.02		
1.9 SDI	AGP; AQM; (50kW)	1896	06.99-10.02		
1.9 TDI	AGR; ALH; (66kW)	1896	06.99-10.02		
1.9 TDI	ASK; ASV; (81kW)	1896	06.99-10.02		
CORDOBA (6L2)					
1.2; 1.2 12V	AZQ; BME; BXV; (47kW-51kW)	1198	10.02-		
1.4 16V	BBY; BBZ; BKY; BXW; (55kW-74kW)	1390	09.02-		
1.6	BAH; (74kW)	1598	04.03-		
1.6 16V	BTS; (77kW)	1598	11.06-		
2.0	AZL; BBX; (85kW)	1984	09.02-		
1.4 TDI	AMF; BNM; (51kW-55kW)	1422	10.02-		
1.4 TDI	BMS; BNV; (59kW)	1422	06.05-		
1.9 SDI	ASY; (47kW)	1896	09.02-		
1.9 TDI	ASZ; ATD; AXR; BLT; BMT; (74kW-96kW)	1896	09.02-		
EXEO (3R)					
1.6	ALZ; (75kW)	1595	03.09-		

RUVILLE YOUR PARTNER

Seat

									1	295406(K)	295404(K):(GS), AEE, →562757
											295405(K):(ST), 1F
											295405(K):(ST), AEE, →562757
											295405(K):(ST), ALM, →000706
											295406(K):(GS), 1F, (mG)
											295406(K):(GS), AEE, →562757, (mG)
					8	265427			1	295404(K)	295404(K):(GS)
									1	295405(K)	295405(K):(ST)
									1	295406(K)	295406(K):(GS), (mG)
215424					8	265427			1	295401(N)	
					8	265427			1	295405(N)	
									1	295403(K)	295403(K):(ST), AEE, 562758→
									1	295404(K)	295403(K):(ST), ALM, 000707→
									1	295405(K)	295404(K):(GS), 1F
									1	295406(K)	295404(K):(GS), AEE, →562757
											295405(K):(ST), 1F
											295405(K):(ST), AEE, →562757
											295405(K):(ST), ALM, →000706
											295406(K):(GS), 1F, (mG)
											295406(K):(GS), AEE, →562757, (mG)
					8	265426					265426: AKU
215411					8	265426			1	295405(N)	
									1	295404(K)	295404(K):(GS), AEY, →050000
									1	295405(K)	295405(K):(ST)
									1	295406(K)	295406(K):(GS), AEY, →050000, (mG)
215403					8	265427			1	295405(N)	
215409					8	265426			1	295405(N)	
									1	295405(K)	295405(K):(ST)
215402					8	265426			1	295405(N)	265426: AGR, →034858
					8	265427					265427: AGR, 034859→
											265427: ALH
215409					8	265426			1	295405(N)	
									1	295404(K)	295404(K):(GS), AFN, →576000
									1	295405(K)	295405(K):(ST)
									1	295406(K)	295406(K):(GS), AFN, →576000, (mG)
					8	265427			1	295405(N)	265427: ASV; 295405(N): ASV
	8	235455			8	265402			1	295403(N)	
	8	235453 [6]									
					16	265416					
	8	235455			8	265402			1	295403(N)	295403(N): AUD, AKK, ANW
	8	235453 [6]							1	295405(N)	295405(N): AEX, AKV, APQ
									1	295403(K)	295403(K):(ST)
	16	235410			16	265402			1	295402(N)	
	16	235400 [6]									
215424					8	265427			1	295401(N)	
					8	265427			1	295405(N)	
									1	295405(K)	295405(K):(ST)
					12	265704					265704:(ELV)
					8	265705					265705:(ALV)
215403					8	265427			1	295405(N)	
215402					8	265426			1	295405(N)	265426: AGR, →034858
					8	265427					265427: AGR, 034859→
											265427: ALH
					8	265427			1	295405(N)	265427: ASV; 295405(N): ASV
	12	235410			12	265402					
	12	235400 [6]									
	16	235410			16	265402					
	16	235400 [6]									
	8	235455			8	265402					
	8	235453 [6]									
	16	235410			16	265402					
	16	235400 [6]									
					8	265427			1	295401(N)	
215406					6	265403					
					6	265403					
215403					8	265427					
215404					8	265403			1	295401(N)	
	8	235409			8	265707					

6 siehe Klappseite vorn • see fold in front.

		cm³			
Seat					
EXEO (3R)					
1.8 T	CFMA; (110kW)	1781	03.09-		
2.0 TFSI	BWE; (147kW)	1984	03.09-		
2.0 TDI	CAGA; CAGC; CAHA; (88kW-125kW)	1968	03.09-		
IBIZA I (021A)					
1.2; 1.5i	021A1000; 021D.2000; (47kW-65kW)	1193-1461	11.84-12.93		
1.7 D	022A.5000; (40kW-42kW)	1714	06.84-05.93		
IBIZA II (6K1)					
1.0i	AER; (37kW)	999	09.96-08.99		
1.0	AAU; (33kW)	1043	03.93-09.96		
1.3i	2G; AAV; (40kW)	1272	03.93-08.99		
1.4i GLX	ABD; AEX; AKV; APQ; (44kW)	1390	09.93-08.99		
1.4i 16V	AFH; (74kW)	1390	09.96-08.99		
1.6 i	1F; (55kW)	1595	09.94-06.99		
1.6i	AFT; (74kW)	1595	04.96-08.99		
1.6i	ABU; AEE; ALM; (55kW)	1598	03.93-08.99		
1.8i	ABS; ADZ; (66kW)	1781	03.93-08.99		
1.8i GTi 16V	ADL; (95kW)	1781	11.93-08.96		
2.0i	2E; AGG; (85kW)	1984	03.93-08.99		
2.0i 16V	ABF; (110kW)	1984	08.96-08.99		
1.9 D	1Y; (47kW)	1896	04.93-08.96	225419	
1.9 SDI	AEY; (47kW)	1896	08.96-08.99	225404	
1.9 D; 1.9 TD	1Y; AAZ; (50kW-55kW)	1896	03.93-08.96	225419	
1.9 TDI	1Z; AHU; (66kW)	1896	08.96-08.99	225403	

RUVILLE YOUR PARTNER

Seat

					12	265704					265704:(ELV)
					8	265705					265705:(ALV)
	16	235408			16	265707					
	16	235406			16	265404					
					8	265426					
					8	265802					
					8	265427			1	295405(N)	
									1	295404(K)	295404(K):(GS), →220083
									1	295405(K)	295405(K):(ST)
									1	295406(K)	295406(K):(GS), →220083, (mG)
					8	265427			1	295405(N)	
									1	295404(K)	295404(K):(GS)
									1	295405(K)	295405(K):(ST)
									1	295406(K)	295406(K):(GS), (mG)
					8	265427			1	295404(K)	295404(K):(GS)
									1	295405(K)	295405(K):(ST)
									1	295406(K)	295406(K):(GS), (mG)
					8	265427			1	295405(N)	
									1	295403(K)	295403(K):(ST), AEX, AKV, AEX908122→, AKV095009→
									1	295404(K)	295403(K):(ST), ANX, APQ
									1	295405(K)	295404(K):(GS), ABD
									1	295406(K)	295404(K):(GS), AEX, AKV, →AEX908121, →AKV095008
											295405(K):(ST), ABD
											295405(K):(ST), AEX, AKV, →AEX908121, →AKV095009
											295406(K):(GS), ABD, (mG)
											295406(K):(GS), AEX, AKV, →AEX908121, →AKV095008, (mG)
					16	265416			2	295405(N)	
									1	295404(K)	295404(K):(GS), →030001
									1	295405(K)	295405(K):(ST)
									1	295406(K)	295406(K):(GS), →030001, (mG)
215425					8	265427					
215424					8	265427			1	295404(K)	295404(K):(GS)
									1	295405(K)	295405(K):(ST)
									1	295406(K)	295406(K):(GS), (mG)
					8	265427			1	295405(N)	
									1	295403(K)	295403(K):(ST), AEE, ALM, AEE562758→, ALM000707→
									1	295404(K)	295404(K):(GS), 1F, ABU
									1	295405(K)	295404(K):(GS), AEE, →562757
									1	295406(K)	295405(K):(ST), 1F, ABU
											295405(K):(ST), AEE, ALM, →AEE562757, →ALM000706
											295406(K):(GS), 1F, ABU, (mG)
											295406(K):(GS), AEE, →562757, (mG)
					8	265426			1	295405(N)	265426: ABS, →935645
					8	265427			1	295404(K)	265426: ADZ, →001109; 295404(K):(GS)
									1	295405(K)	265427: ABS, 935646→; 295405(K):(ST)
									1	295406(K)	265427: ADZ, 001110→; 295406(K):(GS), (mG)
					16	265427					
215424					8	265426			1	295405(N)	215424: AGG; 265426: 2E, →565664
					8	265427			1	295404(K)	265427: 2E, 565665→; 295404(K):(GS)
									1	295405(K)	265427: AGG; 295405(K):(ST)
									1	295406(K)	295406(K):(GS), (mG)
					16	265427			1	295405(N)	
									1	295404(K)	295404(K):(GS)
									1	295405(K)	295405(K):(ST)
									1	295406(K)	295406(K):(GS), (mG)
215419					8	265426			1	295405(N)	225419: 6KV000001→; 215419: 6KV000001→; 265426: 6KV000001→
					8	265427			1	295404(K)	265427: →6KT284000; 295404(K):(GS)
									1	295405(K)	295405(K):(ST)
									1	295406(K)	295406(K):(GS), (mG)
215411					8	265426			1	295405(N)	225404: AEY
									1	295404(K)	295404(K):(GS)
									1	295405(K)	295405(K):(ST)
									1	295406(K)	295406(K):(GS), (mG)
215419					8	265426			1	295405(N)	225419: 6KV000001→; 215419: 6KV000001→; 265426: 6KV000001→
					8	265427			1	295404(K)	265427: →6KT284000; 295404(K):(GS)
									1	295405(K)	295405(K):(ST)
									1	295406(K)	295406(K):(GS), (mG)
215409					8	265426			1	295405(N)	

		cm³			
Seat					
IBIZA II (6K1)					
1.9 TDI	1Z; AHU; (66kW)	1896	08.96-08.99		
1.9 TDI	AFN; (81kW)	1896	02.97-08.99	225403	
IBIZA III (6K1)					
1.0	ALD; ANV; AUC; (37kW)	999	08.99-02.02		
1.0 16V	AST; AVZ; (51kW)	999	05.00-02.02		
1.4	AKK; ANW; AUD; (44kW)	1390	08.99-02.02		
1.4 16V	APE; AQQ; AUA; AUB; (55kW-74kW)	1390	08.99-02.02		
1.6	AEH; AKL; APF; AUR; (74kW)	1595	08.99-02.02		
1.6	ALM; (55kW)	1598	08.99-02.02		
1.8 T 20V	AQX; AYP; (115kW)	1781	07.00-02.02		
2.0	AZL; (85kW)	1984	04.02-		
1.9 SDI	AGP; AQM; (50kW)	1896	08.99-02.02		
1.9 TDI	AGR; ALH; (66kW)	1896	08.99-02.02		
1.9 TDI	ASK; ASV; (81kW)	1896	08.99-02.02		
IBIZA IV (6L)					
1.2	BBM; (44kW)	1198	06.07-05.08		
1.2; 1.2 12V	AZQ; BME; BXV; (47kW-51kW)	1198	02.02-		
1.4 16V	BBY; BKY; BXW; (55kW-63kW)	1390	02.02-		
1.4	AUB; BBZ; (74kW)	1390	02.02-		
1.6	BAH; (74kW)	1598	02.03-		
1.6 16V	BTS; (77kW)	1598	11.06-		
1.8 T Cupra R; 1.8 T FR	BBU; BJX; BKV; BLZ; (110kW-132kW)	1781	12.03-05.08		
2.0	AZL; BBX; (85kW)	1984	04.02-		
1.4 TDI	BNM; (51kW)	1422	05.05-		
1.4 TDI	AMF; (55kW)	1422	05.02-12.05		
1.4 TDI	BMS; BNV; (59kW)	1422	06.05-		
1.9 SDI	ASY; (47kW)	1896	02.02-12.05		
1.9 TDI	ASZ; ATD; AXR; BLT; BMT; (74kW-96kW)	1896	02.02-		
1.9 TDI Cupra R	BPX; BUK; (118kW)	1896	03.04-02.08		
IBIZA V (6J1,6J5)					
1.2	BZG; CGPA; CGPB; (44kW-51kW)	1198	03.08-		
1.4	BXW; CGGB; (63kW)	1390	03.08-		
1.4 TSI	CAVE; CAVF; (110kW-132kW)	1390	06.09-		
1.6	BTS; (77kW)	1598	05.08-		
2.0	CEKA; (85kW)	1984	10.08-		
1.4 TDI	BMS; (59kW)	1422	07.08-		
1.6 TDI	CAYB; CAYC; (66kW-77kW)	1598	05.09-		
1.9 TDI	BLS; BXJ; (66kW-77kW)	1896	03.08-		
2.0 TDI	CFHD; (105kW)	1968	01.10-		
IBIZA V ST (6J8)					
1.2 TSI	CBZB; (77kW)	1197	09.10-		
1.2	CGPA; CGPB; (44kW-51kW)	1198	05.10-		
1.4	CGGB; (63kW)	1390	03.10-		
1.2 TDI	CFWA; (55kW)	1199	04.10-		
1.6 TDI	CAYB; CAYC; CLNA; (66kW-77kW)	1598	03.10-		
INCA (6K9)					
1.4i	AEX; AKV; APQ; AUD; (44kW)	1390	11.95-06.03		

RUVILLE YOUR PARTNER

Seat

									1	295404(K)	295404(K):(GS)
									1	295405(K)	295405(K):(ST)
									1	295406(K)	295406(K):(GS), (mG)
215409					8	265426			1	295405(N)	
									1	295404(K)	295404(K):(GS), AFN, →576000
									1	295405(K)	295405(K):(ST)
									1	295406(K)	295406(K):(GS), AFN, →576000, (mG)
	8	235455			8	265402			1	295403(N)	
	8	235453 [6]									
					16	265416					
	8	235455			8	265402			1	295403(N)	
	8	235453 [6]							1	295403(K)	295403(K):(ST)
	16	235410			16	265402			1	295402(N)	
	16	235400 [6]									
215424					8	265427			1	295401(N)	
					8	265427			1	295405(N)	
									1	295405(K)	295405(K):(ST)
					12	265704					265704:(ELV)
					8	265705					265705:(ALV)
					8	265427			1	295401(N)	295401(N): AQY
215403					8	265427			1	295405(N)	
					8	265426			1	295405(N)	265426: AGR, →034858
					8	265427					265427: AGR, 034859→
											265427: ALH
					8	265427			1	295405(N)	265427: ASV; 295405(N): ASV
					6	265402					
	12	235410			12	265402					
	12	235400 [6]									
	16	235410			16	265402					
	16	235400 [6]									
	16	235410			16	265402			1	295402(N)	295402(N): AUB
	16	235400 [6]									
	8	235455			8	265402					
	8	235453 [6]									
	16	235410			16	265402					
	16	235400 [6]									
					12	265704					265704:(ELV)
					8	265705					265705:(ALV)
					8	265427			1	295401(N)	
215406					6	265403					
215406					6	265403			1	295401(N)	
									1	295404(K)	295404(K):(GS)
									1	295406(K)	295406(K):(GS), (mG)
					6	265403					
215403					8	265427					
215404					8	265403			1	295401(N)	
215404					8	265403					
	12	235410			12	265402					
	16	235410			16	265402					
	16	235404			16	265402					
	16	235410			16	265402					
					8	265427					
					6	265403					
	16	235406			16	265404					
					8	265403					
	16	235406			16	265404					
					8	265402					
	12	235410			12	265402					
	16	235410			16	265402					
	12	235406			12	265404					
	16	235406			16	265404					
	8	235455			8	265402			1	295403(N)	235455: AUD; 265402: AUD; 295403(N): AUD
	8	235453 [6]			8	265427			1	295405(N)	235453: AUD; 265427: AEX, AKV, APQ; 295405(N): AEX, AKV, APQ
									1	295403(K)	295403(K):(ST), AEX, AKV, AEX908122→, AKV095009→
									1	295404(K)	295403(K):(ST), APQ, AUD
									1	295405(K)	295404(K):(GS), AEX, AKV, →AEX908121, →AKV095008

6 siehe Klappseite vorn • see fold in front.

Seat

		cm³			
INCA (6K9)					
1.4i	AEX; AKV; APQ; AUD; (44kW)	1390	11.95-06.03		
1.4 16V	AUA; (55kW)	1390	04.00-06.03		
1.6i	1F; (55kW)	1595	11.95-05.98		
1.6i	AEE; (55kW)	1598	11.95-05.98		
1.7 D	AHB; (42kW)	1716	09.96-06.03	225404	
1.9 D	1Y; (47kW)	1896	11.95-06.03	225419	
1.9 SDI	AEY; AYQ; (47kW)	1896	11.95-06.03	225404	
1.9 TDI	ALH; (66kW)	1896	09.96-06.03		
LEON					
1.8L CUPRA; 1.8l TURBO	(168kW)	1781	01.01-12.06		
LEON (1M)					
1.4 16V	AHW; APE; AXP; BCA; (55kW)	1390	11.99-06.06		
1.6	AEH; AKL; (74kW)	1595	11.99-06.06		
1.6	BFQ; (75kW)	1595	10.05-06.06		
1.6 16 V	AUS; AZD; BCB; (77kW)	1598	09.00-06.06		
1.8 20V; 1.8 T 20V; 1.8 T 20V 4	AGN; AJQ; APG; APP; ARY; AUQ; (92kW-132kW)	1781	11.99-06.06		
1.8 T Cupra R; 1.8 Turbo	AMK; BAM; (154kW-165kW)	1781	02.02-06.06		
2.3 VR5	AQN; (125kW)	2324	09.00-11.03		
2.8; 2.8 Cupra 4	AUE; BDE; (150kW)	2792	02.01-06.06		
1.9 SDI	AQM; (50kW)	1896	11.99-06.06		
1.9 TDI	AGR; ALH; (66kW)	1896	11.99-06.06		
1.9 TDI	AXR; (74kW)	1896	10.05-06.06		
1.9 TDI	AHF; ASV; (81kW)	1896	11.99-06.06		
1.9 TDI	ASZ; (96kW)	1896	05.03-06.06		
1.9 TDI	ARL; (110kW)	1896	02.01-06.06		
LEON (1P1)					
1.2 TSI	CBZB; (77kW)	1197	02.10-		
1.4 16V	BXW; (63kW)	1390	06.06-		
1.4 TSI	CAXC; (92kW)	1390	11.07-		
1.6; 1.6 LPG	BSE; BSF; CCSA; CHGA; (75kW)	1595	07.05-		
1.8 TSI	BZB; CDAA; (118kW)	1798	06.07-		
2.0 FSI; 2.0 TFSI	BLR; BLY; BVY; BVZ; BWA; BWA1; (110kW-147kW)	1984	05.05-		
2.0 TFSI	CCZB; (155kW)	1984	06.09-		
2.0 TFSI	BWJ; CDLA; CDLD; (177kW-195kW)	1984	11.06-		
1.9 TDI	BXF; (66kW)	1896	06.07-		
1.9 TDI	BKC; BLS; BXE; (77kW)	1896	07.05-		
1.9 TDi	ASV; (81kW)	1896	10.05-		
2.0 TDI	AZV; BKD; (100kW-103kW)	1968	07.05-		
2.0 TDI	BMM; (103kW)	1968	10.05-		
2.0 TDI	BMN; CEGA; (125kW)	1968	05.06-		
MALAGA (023A)					
1.2	021A1000; (47kW)	1193	11.84-12.93		
1.7 D	022A.5000; (40kW-42kW)	1714	05.85-12.93		

RUVILLE YOUR PARTNER

Seat

									1	295406(K)	295405(K):(ST), AEX, AKV, →AEX908121, →AKV095009
											295406(K):(GS), AEX, AKV, →AEX908121, →AKV095008, (mG)
	16	235410			16	265402			1	295402(N)	
	16	235400 [6]									
215425					8	265427			1	295405(N)	
									1	295403(K)	295403(K):(ST), AEE, 562758→
									1	295404(K)	295404(K):(GS), 1F
									1	295405(K)	295404(K):(GS), AEE, →562757
									1	295406(K)	295405(K):(ST), 1F
											295405(K):(ST), AEE, →562757
											295406(K):(GS), 1F, (mG)
											295406(K):(GS), AEE, →562757, (mG)
					8	265427					
215411					8	265426			1	295404(K)	295404(K):(GS), AHB, →005000
									1	295405(K)	295405(K):(ST)
									1	295406(K)	295406(K):(GS), AHB, →005000, (mG)
215419					8	265426			1	295405(N)	225419: 6KV000001→; 215419: 6KV000001→; 265426: 6KV000001→
					8	265427			1	295404(K)	265427: →6KT284000; 295404(K):(GS)
									1	295405(K)	295405(K):(ST)
									1	295406(K)	295406(K):(GS), (mG)
215411					8	265426			1	295405(N)	225404: AEY; 215411: AEY; 265426: AEY
									1	295405(K)	295405(K):(ST), AEY
					8	265427					
					12	265704					265704:(ELV)
					8	265705					265705:(ALV)
	16	235410			16	265402			1	295402(N)	295402(N): APE, AXP, AHW
	16	235400 [6]									
215424					8	265427			1	295401(N)	
	8	235409			8	265165					
	8	235402 [6]									
	16	235410			16	265402					
	16	235400 [6]									
					12	265704			2	295401(N)	265704:(ELV)
					8	265705					265705:(ALV)
					12	265704					265704:(ELV)
					8	265705					265705:(ALV)
	20	235701			20	265703					
	24	235701			24	265703					
215403					8	265427			1	295405(N)	
215402					8	265426			1	295405(N)	265426: AGR, →034858
					8	265427					265427: AGR, 034859→
											265427: ALH
					8	265403					
215402					8	265427			1	295405(N)	215402: AHF
215404					8	265403			1	295401(N)	
215404					8	265403					
					8	265402					
	16	235410			16	265402					
	16	235400 [6]									
	16	235404			16	265402					
	8	235409			8	265165					
	8	235402 [6]									
	16	235700			16	265707					
	16	235408			16	265165					
	16	235700			16	265707					
	16	235408			16	265165					
					8	265403					
215404					8	265403					215404: BXE; BKC
					8	265427					
215421											215421:(ELV)
215422											215422:(ALV)
					8	265403					
215421	16	235406			16	265404					215421: BMN, (ELV); 235406: CEGA; 265404: CEGA
215423											215423: BMN, (ALV)
					8	265426					
					8	265802					

6 siehe Klappseite vorn • see fold in front.

		cm³			

Seat

RONDA (022A)					
1.7 D	022A.5000; (40kW-41kW)	1714	06.82-12.86		
TERRA (24)					
1.3 D	MN; (33kW)	1272	03.90-12.94		
1.4 D	1W; (35kW)	1398	10.90-12.95		
TOLEDO I (1L)					
1.6i	1F; ABN; EZ; (52kW-55kW)	1595	05.91-03.99		
1.6i	AFT; (74kW)	1595	11.96-03.99		
1.8i	RP; (65kW)	1781	05.91-12.96		
1.8i	ABS; ADZ; (66kW)	1781	11.93-12.96		
1.8 16V	PL; (92kW)	1781	05.91-03.99		
1.8 16V; 1.8 GT	KR; (98kW-102kW)	1781	05.91-03.99		
2.0i	2E; AGG; (85kW)	1984	05.91-03.99		
2.0i 16V	ABF; (110kW)	1984	11.93-03.99		
1.9 D; 1.9 TD	1Y; AAZ; (47kW-55kW)	1896	05.91-03.99	225419	
1.9 TDI	1Z; AHU; (66kW)	1896	08.95-03.99	225403	
1.9 TDI	AFN; (81kW)	1896	11.96-03.99	225403	
TOLEDO II (1M2)					
1.4 16V	AHW; AXP; (55kW)	1390	07.99-05.06		
1.6	AEH; AKL; (74kW)	1595	04.99-09.00		
1.6	BFQ; (75kW)	1595	08.05-05.06		
1.6	AUS; AZD; BCB; (77kW)	1598	09.00-05.06		
1.8 20Vi	AGN; APG; (92kW)	1781	04.99-05.06		
1.8	ARY; (132kW)	1781	05.01-04.04		
1.8 20VT	AUQ; (132kW)	1781	05.01-05.06		
1.8	AMK; BAM; (154kW-165kW)	1781	05.02-10.05		
2.3 V5	AGZ; (110kW)	2324	04.99-05.01		
2.3 V5 20V	AQN; (125kW)	2324	05.01-05.06		
2.8	AUE; BDE; (150kW)	2792	10.00-04.04		
1.9 SDI	AQM; (50kW)	1896	11.99-06.04		
1.9 TDI	AGR; ALH; (66kW)	1896	04.99-05.06		

RUVILLE YOUR PARTNER

Seat

					8	265802					
									1	295404(K)	295404(K):(GS)
									1	295405(K)	295405(K):(ST)
									1	295406(K)	295406(K):(GS), (mG)
					8	265426			1	295404(K)	295404(K):(GS)
									1	295406(K)	295406(K):(GS), (mG)
215425					8	265427			1	295405(N)	
									1	295404(K)	295404(K):(GS)
									1	295405(K)	295405(K):(ST)
									1	295406(K)	295406(K):(GS), (mG)
					8	265427			1	295404(K)	295404(K):(GS)
									1	295405(K)	295405(K):(ST)
									1	295406(K)	295406(K):(GS), (mG)
					8	265426			1	295405(N)	
									1	295404(K)	295404(K):(GS)
									1	295405(K)	295405(K):(ST)
									1	295406(K)	295406(K):(GS), (mG)
					8	265426			1	295405(N)	265426: ABS, →935645
					8	265427			1	295404(K)	265426: ADZ, →001109; 295404(K):(GS)
									1	295405(K)	265427: ABS, 935646→; 295405(K):(ST)
									1	295406(K)	265427: ADZ, 001110→; 295406(K):(GS), (mG)
					16	265426			1	295405(N)	
									1	295404(K)	295404(K):(GS)
									1	295405(K)	295405(K):(ST)
									1	295406(K)	295406(K):(GS), (mG)
					16	265427			1	295405(N)	
									1	295404(K)	295404(K):(GS)
									1	295405(K)	295405(K):(ST)
									1	295406(K)	295406(K):(GS), (mG)
215424					8	265426			1	295405(N)	215424: AGG; 265426: 2E, →565664
					8	265427			1	295404(K)	265427: 2E, 565665→; 295404(K):(GS)
									1	295405(K)	265427: AGG; 295405(K):(ST)
									1	295406(K)	295406(K):(GS), (mG)
					16	265426			1	295405(N)	
									1	295404(K)	295404(K):(GS)
									1	295405(K)	295405(K):(ST)
									1	295406(K)	295406(K):(GS), (mG)
215419					8	265426			1	295405(N)	
									1	295404(K)	295404(K):(GS)
									1	295405(K)	295405(K):(ST)
									1	295406(K)	295406(K):(GS), (mG)
215409					8	265426			1	295405(N)	
									1	295404(K)	295404(K):(GS)
									1	295405(K)	295405(K):(ST)
									1	295406(K)	295406(K):(GS), (mG)
215409					8	265426			1	295405(N)	
									1	295404(K)	295404(K):(GS), AFN, →576000
									1	295405(K)	295405(K):(ST)
									1	295406(K)	295406(K):(GS), AFN, →576000, (mG)
	16	235410			16	265402			1	295402(N)	
	16	235400 [6]									
215424					8	265427			1	295401(N)	
	8	235409			8	265165					
	8	235402 [6]									
	16	235410			16	265402					
	16	235400 [6]									
					12	265704			2	295401(N)	265704:(ELV)
					8	265705					265705:(ALV)
					12	265704					265704:(ELV)
					8	265705					265705:(ALV)
					12	265704			2	295401(N)	265704:(ELV)
					8	265705					265705:(ALV)
					12	265704					265704:(ELV)
					8	265705					265705:(ALV)
					12	265426					
	20	235701			20	265703					
	24	235701			24	265703					
					8	265427					
215402					8	265426			1	295405(N)	265426: AGR, →034858

6 siehe Klappseite vorn • see fold in front.

Seat

		cm³			
TOLEDO II (1M2)					
1.9 TDI	AGR; ALH; (66kW)	1896	04.99-05.06		
1.9 TDi	AXR; (74kW)	1896	08.05-05.06		
1.9 TDI	AHF; ASV; (81kW)	1896	04.99-05.06		
1.9 TDI	ASZ; (96kW)	1896	05.03-05.06		
1.9 TDI	ARL; (110kW)	1896	10.00-05.06		
TOLEDO III (5P2)					
1.6	BGU; BSE; BSF; CCSA; (75kW)	1595	10.04-05.09		
1.8 TFSI	BYT; BZB; CDAA; (118kW)	1798	01.07-		
2.0 FSI; 2.0 TFSI	BLR; BLY; BVY; BVZ; BWA; (110kW-147kW)	1984	10.04-		
1.9 TDI	BJB; BKC; BLS; BXE; (77kW)	1896	10.04-		
2.0 TDI	AZV; BKD; (100kW-103kW)	1968	04.04-05.09		
2.0 TDI	BMM; (103kW)	1968	11.05-05.09		
2.0 TDI	BMN; CEGA; (125kW)	1968	01.06-05.09		

Skoda

130					
GL (S135)	135/8; (43kW)	1280	05.88-10.91		
FABIA (5J)					
1.2 TSI	CBZA; CBZB; (63kW-77kW)	1197	03.10-		
1.2	BBM; CHFA; (44kW)	1198	12.06-		
1.2	BZG; CEVA; CGPA; (51kW)	1198	01.07-		
1.4; 1.6	BTS; BXW; (63kW-77kW)	1390-1598	01.07-		
1.4 TDI	BMS; BNM; BNV; (51kW-59kW)	1422	01.07-		
1.6 TDI	CAYB; CAYC; (66kW-77kW)	1598	03.10-		
1.9 TDI	BLS; BSW; (77kW)	1896	04.07-		
FABIA (6Y)					
1.2	AWY; BMD; (40kW)	1198	07.01-03.08		
1.2	AZQ; BME; (47kW)	1198	01.03-03.08		
1.4 16V	AUA; BBY; BKY; (55kW)	1390	10.99-03.08		
1.4; 1.4 16V	BUD; (59kW)	1390	02.06-12.07		
1.4 16V	AUB; BBZ; (74kW)	1390	12.99-03.08		
2.0	AQY; AZL; (85kW)	1984	12.99-03.08		
1.4 TDI	BNM; (51kW)	1422	10.05-03.08		
1.4 TDI	AMF; BNV; (55kW-59kW)	1422	04.03-03.08		
1.9 SDI	ASY; (47kW)	1896	11.99-03.08		
1.9 TDI; RS	ASZ; ATD; AXR; BLT; (74kW-96kW)	1896	01.00-03.08		
FABIA PRAKTIK					
1.2	AWY; BMD; (40kW)	1198	07.01-12.07		
1.2	AZQ; BME; BZG; CGPA; (47kW-51kW)	1198	01.03-		
1.4	BXW; (63kW)	1390	03.07-		
1.4 TDI	BMS; BNM; BNV; (51kW-59kW)	1422	10.05-		
1.9 SDI	ASY; (47kW)	1896	07.01-12.07		
FAVORIT (781)					
1.3 136	136L; (45kW)	1289	10.90-09.94		
FELICIA I (791,795,797)					
1.6; 1.6 GLX; 1.6 LX	AEE; (55kW)	1598	08.95-		
1.9 D	AEF; (47kW)	1896	10.95-	225419	

RUVILLE YOUR PARTNER

Seat → Skoda

					8	265427					265427: AGR, 034859→
											265427: ALH
215404					8	265403					
215402					8	265427			1	295405(N)	215402: AHF
215404					8	265403			1	295401(N)	
215404					8	265403					
	8	235409			8	265165			1	295401(N)	
	8	235402 [6]									
	16	235700			16	265707					
	16	235408			16	265165					
215404					8	265403					
215421											215421:(ELV)
215422											215422:(ALV)
					8	265403					
215421	16	235406			16	265404					215421: BMN, (ELV); 235406: CEGA; 265404: CEGA
215423											215423: BMN, (ALV)

									1	295404(K)	295404(K):(GS)
									1	295406(K)	295406(K):(GS), (mG)
					8	265402					
					6	265402					
	12	235410			12	265402					
	12	235400 [6]									
	16	235410			16	265402					
	16	235400 [6]									
					6	265403					
	16	235406			16	265404					
215404					8	265403					
	6	235455			6	265402					
	6	235453 [6]									
	12	235410			12	265402					
	12	235400 [6]									
	16	235410			16	265402			1	295402(N)	
	16	235400 [6]									
	16	235410			16	265402					
	16	235400 [6]									
	16	235410			16	265402			1	295402(N)	
	16	235400 [6]									
					8	265427			1	295401(N)	295401(N): AQY
					6	265403					
215406					6	265403					
215403					8	265426					
215404					8	265403			1	295401(N)	
	6	235455			6	265402					
	6	235453 [6]									
	12	235410			12	265402					
	12	235400 [6]									
	16	235410			16	265402					
	16	235400 [6]									
					6	265403					
215403					8	265426					
									1	295404(K)	295404(K):(GS)
									1	295406(K)	295406(K):(GS), (mG)
					8	265427			1	295405(N)	
									1	295403(K)	295403(K):(ST), AEE, 562758→
									1	295404(K)	295404(K):(GS), →562757
									1	295405(K)	295405(K):(ST), AEE, →562757
									1	295406(K)	295406(K):(GS), →562757, (mG)
215419					8	265426			1	295405(N)	
									1	295404(K)	295404(K):(GS)
									1	295405(K)	295405(K):(ST)
									1	295406(K)	295406(K):(GS), (mG)

6 siehe Klappseite vorn • see fold in front.

Skoda

		cm³			
FELICIA II (6U1, 6U5)					
1.6	AEE; (55kW)	1598	01.98-06.01		
1.9 D	AEF; (47kW)	1896	01.98-06.01	225419	
OCTAVIA (1U)					
1.4	AXP; BCA; (55kW)	1390	08.00-		
1.6	AEH; AKL; (74kW)	1595	02.97-		
1.6	AVU; BFQ; (75kW)	1595	09.00-		
1.6	AEE; (55kW)	1598	09.96-		
1.8 20V	AGN; (92kW)	1781	09.96-		
1.8 T; RS 1.8 T; RS 1.8 T 20V	AGU; ARX; ARZ; AUM; AUQ; (110kW-132kW)	1781	08.97-		
2.0	AEG; APK; AQY; AZH; AZJ; (85kW)	1984	04.99-		
1.9 SDI	AGP; AQM; (50kW)	1896	06.97-		
1.9 TDI	AGR; ALH; (66kW)	1896	09.96-		
1.9 TDI	ATD; AXR; (74kW)	1896	08.00-		
1.9 TDI	AHF; ASV; (81kW)	1896	08.97-		
1.9 TDI	ASZ; (96kW)	1896	01.03-		
OCTAVIA (1Z)					
1.2 TSI	CBZB; (77kW)	1197	02.10-		
1.4	BCA; BUD; (55kW-59kW)	1390	05.04-		
1.4 TSI	CAXA; (90kW)	1390	11.08-		
1.6; 1.6 GreenLine	BGU; BSE; BSF; CCSA; (75kW)	1595	06.04-		
1.6 FSI	BLF; (85kW)	1598	02.04-		
1.8 TSI	BZB; CDAA; (118kW)	1798	06.07-		
2.0 FSI	BLR; BLX; BLY; BVX; BVY; BVZ; (110kW)	1984	11.04-		
2.0 RS	BWA; CCZA; (147kW)	1984	10.05-		
1.6 TDI	CAYC; (77kW)	1598	06.09-		
1.9 TDI	BJB; BKC; BLS; BXE; (77kW)	1896	06.04-		
2.0 TDI; 2.0 TDI 16V	AZV; BKD; (100kW-103kW)	1968	02.04-		
2.0 TDI	BMM; (103kW)	1968	11.05-		
2.0 TDI	BMN; CEGA; (125kW)	1968	04.06-		
RAPID (120G,130G,135G)					
1.3 S (135GL)	135/8; (43kW)	1280	09.84-12.90		
ROOMSTER (5J)					
1.2 TSI	CBZA; CBZB; (63kW-77kW)	1197	03.10-		
1.2	BME; BZG; CGPA; (47kW-51kW)	1198	05.06-		
1.4; 1.6	BTS; BXW; (63kW-77kW)	1390-1598	09.06-		
1.4 TDI	BMS; BNM; BNV; (51kW-59kW)	1422	07.06-		
1.6 TDI	CAYB; CAYC; (66kW-77kW)	1598	03.10-		
1.9 TDI	BLS; BSW; (77kW)	1896	09.06-		
SUPERB (3T)					
1.4 TSI	CAXC; (92kW)	1390	07.08-		
1.8 TSI	BZB; CDAA; (118kW)	1798	03.08-		
3.6	CDVA; (191kW)	3580	11.08-		
1.9 TDI	BLS; BXE; (77kW)	1896	03.08-		
2.0 TDI	BMP; (103kW)	1968	03.08-		
2.0 TDI	CBBB; CFGB; (125kW)	1968	07.08-		
SUPERB (3T5)					
1.4 TSI	CAXC; (92kW)	1390	10.09-		
1.8 TSI; 1.8 TSI 4x4	CDAA; (118kW)	1798	10.09-		
3.6 V6 4x4	CDVA; (191kW)	3580	10.09-		

RUVILLE YOUR PARTNER

Skoda

					8	265427			1	295405(N)	
									1	295403(K)	295403(K):(ST), AEE, 562758→
									1	295404(K)	295404(K):(GS), →562757
									1	295405(K)	295405(K):(ST), AEE, →562757
									1	295406(K)	295406(K):(GS), →562757, (mG)
215419					8	265426			1	295405(N)	
									1	295404(K)	295404(K):(GS)
									1	295405(K)	295405(K):(ST)
									1	295406(K)	295406(K):(GS), (mG)
	16	235410			16	265402			1	295402(N)	
	16	235400 [6]									
215424					8	265427			1	295401(N)	
	8	235409			8	265707			1	295401(N)	
					8	265427			1	295405(N)	
									1	295403(K)	295403(K):(ST), AEE, 562758→
									1	295404(K)	295404(K):(GS), →562757
									1	295405(K)	295405(K):(ST), AEE, →562757
									1	295406(K)	295406(K):(GS), →562757, (mG)
					12	265704			1	295401(N)	265704:(ELV)
					8	265705					265705:(ALV)
					12	265704			2	295401(N)	265704:(ELV)
					8	265705					265705:(ALV)
215424					8	265427			1	295401(N)	215424: AEG
215403					8	265426			1	295405(N)	
215402					8	265426			1	295405(N)	
215404					8	265403					
215402					8	265426			1	295405(N)	215402: AHF
215404					8	265403			1	295401(N)	
					8	265402					
	16	235410			16	265402					
	16	235400 [6]									
					16	265402					
	8	235409			8	265707			1	295401(N)	
	16	235410			16	265402					
	16	235400 [6]									
	16	235700			16	265707					
	16	235408			16	265707					
	16	235408			16	265707					235408: BWA
	16	235700									235700: CCZA
	16	235406			16	265404					
215404					8	265403					215404: BJB; BKC; BXE
215421											215421:(ELV)
215422											215422:(ALV)
					8	265403					
215421	16	235406			16	265404					215421: BMN, (ELV); 235406: CEGA; 265404: CEGA
215423											215423: BMN, (ALV)
									1	295404(K)	295404(K):(GS)
									1	295406(K)	295406(K):(GS), (mG)
					8	265402					
	12	235410			12	265402					
	12	235400 [6]									
	16	235410			16	265402					
	16	235400 [6]									
					6	265403					
	16	235406			16	265404					
215404					8	265403					
	16	235404			16	265402					
	16	235700			16	265707					
	24	235701			24	265703					
215404					8	265403					215404: BXE
					8	265403					
	16	235406			16	265404					
					16	265402					
	16	235700			16	265707					
	24	235701			24	265703					

6 siehe Klappseite vorn • see fold in front.

		cm³			
Skoda					
SUPERB (3T5)					
2.0 TDI	BMP; (103kW)	1968	03.08-		
2.0 TDI	BKD; CFFB; CLJA; (103kW)	1968	10.09-		
2.0 TDI; 2.0 TDI 4x4	CBBB; CFGB; (125kW)	1968	10.09-		
SUPERB (3U4)					
1.8 T	AWT; (110kW)	1781	02.02-03.08		
2.0	AZM; (85kW)	1984	02.02-03.08		
2.8 V6	AMX; (142kW)	2771	02.02-03.08		
1.9 TDI	AVB; (74kW)	1896	08.02-10.05		
1.9 TDI	BPZ; BSV; (77kW-85kW)	1896	10.05-03.08		
1.9 TDI	AVF; AWX; (96kW)	1896	02.02-03.08		
2.0 TDI	BSS; (103kW)	1968	10.05-03.08		
2.5 TDI	AYM; (114kW)	2496	02.02-08.03	225411	
2.5 TDI	BDG; (120kW)	2496	06.03-03.08		
YETI					
1.2 TSI	CBZB; (77kW)	1197	09.09-		
1.8 TSI 4x4	CDAA; (118kW)	1798	05.09-		
2.0 TDI; 2.0 TDI 4x4	CBDB; CEGA; CFHA; CFHC; CFHF; CFJA; (81kW-125kW)	1968	05.09-		
Smart (MCC)					
FORFOUR					
1.5	OM639.939; (50kW-70kW)	1493	09.04-		
FORTWO					
0.7	(37kW-55kW)	698	01.04-		
0.8 CDI	OM660DE8LA; (30kW)	799	01.04-		
0.8 CDi	OM660.950; (33kW-40kW)	799	01.07-		
ROADSTER					
0.7; 0.7 (452.332); 0.7 Brabus	(45kW-74kW)	698	04.03-		
SMART					
0.6; 0.6 (MC01)	M160E6ALB03; (40kW)	599	07.98-01.04		
0.8 CDI	OM660DE8LA; (30kW)	799	11.99-01.04		
Ssangyong					
ACTYON					
200 Xdi	(104kW)	1998	10.06-		
KYRON					
2.0 Xdi	(104kW)	1998	05.05-		
2.7 Xdi	(121kW)	2696	05.05-		
REXTON					
3.2	(162kW)	3199	04.02-		
2.7 Xdi	(120kW)	2696	08.04-		
2.7 D	(137kW)	2696	05.06-		
RODIUS					
2.7 Xdi	(120kW)	2696	05.05-		
Suzuki					
GRAND VITARA					
3.2	N32A; (171kW)	3195	01.09-		
IGNIS II					
1.3 DDiS	Z13DT; (51kW)	1248	09.03-		
LIANA (ER)					
DDiS	8HY; (66kW)	1398	04.04-		
SPLASH					
1.3 CDTI	D13A; Z13DTJ; (55kW)	1248	01.08-		
SWIFT III (SG)					
1.3 DDiS	D13A; Z13DT; (51kW-55kW)	1248	08.05-		
SX4					
1.6 DDIS	9HX; (66kW)	1560	04.07-		
1.9 DDiS	D19AA; (88kW)	1910	06.06-		
2.0 DDiS; 2.0 DDiS 4x4	D20AA; (99kW)	1956	07.09-		

RUVILLE YOUR PARTNER

Skoda → Suzuki

					8	265403					
215421	16	235406			16	265404					215421: BKD, (ELV); 235406: CFFB; CLJA; 265404: CFFB; CLJA
215422											215422: BKD, (ALV)
	16	235406			16	265404					
					12	265704			2	295401(N)	265704:(ELV)
					8	265705					265705:(ALV)
					8	265427					
					18	265704					265704:(ELV)
					12	265705					265705:(ALV)
215404					8	265403					
					8	265403					
215404					8	265403					
					8	265403					
215407	24	235405			24	265702					215407:(ELV), (Zyl.:1-3)
215408											215408:(ELV), (Zyl.:4-6)
215413											215413:(ALV), (Zyl.:1-3)
215418											215418:(ALV), (Zyl.:4-6)
	24	235406			24	265404					
					16	265402					
	16	235700			16	265707					
	16	235406			16	265404					

	12	235118			12	265165					
					6	265165					
	6	238701			6	265103					
	6	238700 [6]									
	6	238701			6	265106					
					6	265165					
					6	265165					
	6	238701			6	265103					
	6	238700 [6]									

	16	239100			16	265165					239100: D20DT; 265165: D20DT
	16	239100			16	265165					239100: D20DT; 265165: D20DT
	20	239100			20	265165					239100: D27DT; 265165: D27DT
					24	265150					
	20	239100			20	265165					239100: D27DT; 265165: D27DT
	20	239100			20	268400					239100: D27DTP; 268400: D27DTP
	20	239100			20	265165					239100: D27DT; 265165: D27DT

	24	235301			24	265330					
	16	235809			16	265809					
	16	235207			16	265165					
	16	235809			16	265809					
	16	235809			16	265809					
	16	235207			16	265165					
					8	265802					
	16	235302			16	265809					235302: D20AA; 265809: D20AA

6 siehe Klappseite vorn • see fold in front.

		cm³			
Suzuki					
WAGON R+ (MM)					
1.3 DDiS	Z13DT; (51kW)	1248	09.03-		
Talbot					
HORIZON					
1.9 D	XUD9; (47kW-48kW)	1905	07.82-06.86	225902 225910	
SAMBA (51A,51E)					
0.9	5C1; (31kW)	947	01.81-12.85	225901	
Toyota					
4 RUNNER (__N130)					
3.0 V6	3VZ-E; (105kW)	2959	07.90-11.95		
AURIS					
1.6; 1.6 VVTi; 1.8	1ZR-FAE; 1ZR-FE; 2ZR-FAE; (91kW-108kW)	1598-1798	03.07-		
1.4 D-4D	(66kW)	1364	03.07-		
2.0 D-4D; 2.2 D	1AD-FTV; 2AD-FHV; (93kW-130kW)	1998-2231	03.07-		
AVENSIS (_T22_)					
2.0 D; 2.0 TD	2C-TE; (66kW)	1975	09.97-02.03		
2.0 D-4D	1CD-FTV; (81kW)	1995	10.99-02.03		
AVENSIS (T25)					
2.0 D-4D	1CD-FTV; (85kW)	1995	04.03-		
2.0 D-4D; 2.2 D-4D; 2.2 D-CAT	1AD-FTV; 2AD-FHV; 2AD-FTV; (93kW-130kW)	1998-2231	07.05-		
AVENSIS (T27)					
1.6; 1.8	1ZR-FAE; 2ZR-FAE; (97kW-108kW)	1598-1798	02.09-		
2.0	3ZR-FAE; (112kW)	1987	02.09-		
2.0 D; 2.2 D	1AD-FTV; 2AD-FHV; 2AD-FTV; (93kW-130kW)	1998-2231	02.09-		
AVENSIS VERSO (AC_)					
D4-D	1CD-FTV; (85kW)	1995	08.01-		
CAMRY (_V2_/_V20)					
2.0 TD	2C-T; (62kW)	1975	11.86-05.91		
CARINA (TA4L,TA6L,TA4K,TA6K)					
1.6; 1.8	2T; 3T; 3T-C; (54kW-57kW)	1588-1770	01.78-09.83		
1.8	3T; (63kW)	1770	01.82-02.87		
CARINA E (_T19_)					
1.6; 1.8; 1.8i	4A-FE; 7A-FE; (73kW-79kW)	1587-1762	01.95-09.97		
2.0 D; 2.0 TD	2C; 2C-T; (54kW-61kW)	1975	04.92-09.97		
CARINA II (_T15_)					
1.8 GLI	1S-EL; 1S-L; (74kW)	1832	10.83-11.87		
2.0 D	2C-L; (50kW-51kW)	1974	02.84-05.88		
CARINA II (_T17_)					
1.6	4A-FE; (72kW-75kW)	1587	12.87-03.92		
2.0 GLI	3S-FE; (89kW)	1998	12.87-03.92		
2.0 D	2C-L; (54kW)	1975	12.87-01.92		
CELICA (_T18_)					
1.6 STi	4A-FE; (77kW)	1587	10.89-01.94		
CELICA (TA4C,TA60,RA40,RA6_)					
1.6 ST	2TB; 4A-L; (63kW)	1588	08.77-08.85		
1.6 ST	2TB; (63kW)	1588	08.77-08.85		
1.6 ST	2T; (66kW)	1588	02.79-08.83		
CELICA SUPRA (MA61)					
2.8i	5M-GE; (125kW)	2759	05.82-10.86		
COROLLA					
1.6; 1.6 Dual VVTi	(91kW-97kW)	1598	01.07-		
1.4 D-4D	1ND-TV; (66kW)	1364	01.09-		
2.0 D-4D	(93kW)	1998	01.07-		
COROLLA (_E7_)					
1.6	2T; 2TB; (54kW-63kW)	1588	09.79-09.83		
COROLLA (_E8_)					
1.8 D	1C-L; (47kW)	1839	06.83-08.87		
COROLLA (_E9_)					
1.6; 1.6 GTI; 1.6 XLI	4A-F; 4A-FE; 4A-GE; (66kW-85kW)	1587	08.87-06.92		
1.8 D	1C; (47kW-49kW)	1839-1840	08.87-06.92		
COROLLA (_E10_)					
1.3 XLI 16V	4E-FE; (65kW)	1332	07.92-04.97		
2.0 D	2C; (53kW)	1975	07.92-04.97		

RUVILLE YOUR PARTNER

Suzuki → Toyota

	16	235809			16	265809					

215910									1	295912(N)	215910:VP
215913											225910:VP
215912											

					12	266907					
	16	236900			16	266908					
	16	236902									
	16	236901			16	266911					
					8	266907					266907:10.97→, →07.00
					16	266903					266903:→01.03
					16	266903					
	16	236901			16	266911					
	16	236900			16	266908					
	16	236900			16	266909					
	16	236901			16	266911					
					16	266903					
					8	266907					266907:→08.88
					8	266904					266904:08.81→
					8	266904					266904:→09.83
					16	266901					
					8	266907					
					8	266900					
					8	266907					
					16	266903					
					16	266903					266903:→11.89
					8	266907					
					16	266903					
					8	266904					266904: 2TB, 08.81→, →07.85
					8	266904					266904:08.81→, →07.85
					8	266904					266904:08.81→
					12	266900					266900:→12.85
	16	236900			16	266908					
	16	236902									
	16	236901			16	266911					
					8	266904					
					8	266907					266907:04.85→, →04.87
					16	266903					
					8	266907					
					16	266903					266903:→09.94
					8	266907					

		cm³			
Toyota					
COROLLA (_E11_)					
2.0 D	2C-E; (53kW)	1975	04.97-02.00		
2.0 D-4D	1CD-FTV; (66kW)	1995	09.00-01.02		
2.2 D4d	2AD-FHV; (130kW)	2231	11.06-		
COROLLA (_E12_)					
1.6; 1.6 VVTi	1ZR-FE; (91kW)	1598	10.06-		
1.4 D	1ND-TV; (66kW)	1364	07.04-		
2.0 D-4D; 2.0 D4-D	1CD-FTV; (66kW-85kW)	1995	01.02-		
COROLLA VERSO (_E12J_)					
2.0 D-4D	1CD-FTV; (66kW)	1995	01.02-05.04		
COROLLA VERSO (ZER_, ZZE_)					
2.0 D-4D	1CD-FTV; (85kW)	1995	04.04-		
2.2 D; 2.2 D-4D	2AD-FHV; 2AD-FTV; (100kW-130kW)	2231	10.05-		
CRESSIDA					
2.0 GLI	1G-E; (80kW)	1988	11.82-12.84		
HIACE					
2.7	(111kW)	2694	01.05-		
HIACE I (_H_)					
1.6	12R; (49kW)	1587	01.79-12.84		
HIACE III (_H10_)					
2.0; 2.4; 2.4i	1RZ; 2RZ-E; (74kW-88kW)	1998-2438	08.89-08.95		
IQ					
1.33	1NR-FE; (72kW)	1329	01.09-		
1.4 D-4D	1ND-TV; (66kW)	1364	01.09-		
LAND CRUISER					
4.7 V8	(212kW)	4664	01.08-		
LAND CRUISER (_J4_)					
4.2	2F; (89kW)	4230	01.75-04.86		
4.0 D	2H; (76kW)	3980	08.80-10.84		
LAND CRUISER (_J6_)					
4.0	3F-E; (115kW)	3956	08.87-12.89		
4.2	2F; (88kW)	4230	10.81-01.88		
4.0 D; 4.0 TD	12HT; 2H; (74kW-100kW)	3980	10.81-12.89		
LAND CRUISER (_J8_) 80					
4.0	3F-E; (115kW)	3956	01.90-08.92		
LAND CRUISER (_J10_) 100					
4.7 V8 32V	2UZ-FE; (173kW)	4664	01.98-		
LITEACE (_CM3_V,KM3_V)					
1.8 D	1C; (46kW)	1839	10.85-08.88		
LITEACE (_R2_)					
2.2	4Y-EC; (72kW)	2237	01.92-01.95		
MODELL F (_R2_,31)					
1.8 DE LUXE; 2.0 SUPER	2Y; 2Y-C; 3Y; 3Y-C; (58kW-65kW)	1812-1998	11.82-08.88		
2.2	4Y-EC; (72kW)	2237	08.87-01.90		
PICNIC (_XM10)					
2.0	3S-FE; (90kW)	1998	01.01-12.01		
2.2 D	3C-TE; (66kW)	2184	08.97-12.01		
PREVIA (ACR3)					
2.0 D4-D	1CD-FTV; (85kW)	1995	03.01-		
PRIUS (ZVW30)					
1.8	2ZR-FXE; (73kW)	1798	01.09-		
RAV 4 III (ACA_, ACE_)					
2.2 D-4D; 2.2 D-CAT	2AD-FHV; 2AD-FTV; (100kW-130kW)	2231	03.06-		
URBAN CRUISER					
1.4 D-4D; 1.4 D-4D 4x4	1ND-TV; (66kW)	1364	04.09-		
VERSO					
2.2 D-4D; 2.2 D-CAT	2AD-FHV; (110kW-130kW)	2231	04.09-		
YARIS					
D-4D	1ND-TV; (66kW)	1364	01.06-		
YARIS (_CP10)					
1.4 D4-D	1ND-TV; (55kW)	1364	12.01-		
YARIS VERSO (NCP2_)					
1.4 D4-D	1ND-TV; (55kW)	1364	12.01-		

RUVILLE YOUR PARTNER

Toyota

					8	266907					266907:→10.99
					16	266903					266903:→09.01
	16	236901			16	266911					
	16	236900			16	266908					
	16	236902									
					16	266903					
					16	266903					
					16	266903					
	16	236901			16	266911					
					12	266900					
	16	236900			16	266909					
					8	266904					266904:11.82→
					8	266907					
	16	236900			16	266909					
	16	236902									
					32	269600					
					12	266905					266905:08.80→
					8	266904					
					12	266906					266906:08.88→
					12	266905					266905:→11.84
					8	266904					
					12	266906					
					32	269600					269600:10.98→, →08.02
					8	266907					
					8	266902					
					8	266902					
					8	266902					266902:→08.88
					16	266901					
					8	266907					266907:09.97→, →05.01
					16	266903					
	16	236900			16	266909					
	16	236901			16	266911					
	16	236902									
	16	236901			16	266911					
	16	236902									
	16	236902									
	16	236902									

		cm³			
AGILA					
1.0 12V	Z10XE; Z10XEP; (43kW-44kW)	973-998	09.00-		
1.2 16V; 1.2 16V Twinport	Z12XE; Z12XEP; (55kW-59kW)	1199-1229	09.00-		
1.3 CDTI	Z13DTJ; (55kW)	1248	01.08-		
ANTARA					
2.4	Z24XED; (104kW)	2405	11.06-		
3.2 V6	Z32SEE; (165kW)	3195	11.06-		
2.0 CDTI	Z20DMH; (110kW)	1991	11.06-		
ASTRA					
1.2 S	12S; (44kW)	1196	02.82-08.84		
1.3 S	13S; (55kW)	1297	09.79-08.84	225306	225304
1.6 S	16S; 16SH; (66kW)	1598	09.81-08.86	225313	225311
1.8 GTE	18E; (85kW)	1796	03.83-08.86	225334	
2.0	Z20LEL; (125kW)	1998	02.06-09.06		
1.6 D	16D; (40kW)	1598	02.82-08.86	225329 225342	225328 225340
ASTRA MK II					
1.2	12S; (44kW)	1196	09.84-08.91		
1.3	13S; (55kW)	1297	09.84-08.91	225306	225304
1.4i	C14NZ; (44kW)	1389	01.90-12.91	225351	225350
1.4	14NV; (55kW)	1389	01.89-08.91	225322	225320
1.6i	C16LZ; C16NZ; E16NZ; (55kW)	1598	10.87-08.93	225319	225317
1.6; 1.6 S; 1.6i	16SV; (60kW)	1598	09.84-12.91	225319	225317
1.6; 1.6 S	16S; 16SH; (66kW)	1598	09.84-08.91	225313	225311
1.8; 1.8 GTE; 1.8i	18E; 18SE; (82kW-85kW)	1796	09.84-08.91	225334	
2.0i	20NE; C20NE; (85kW)	1998	01.87-08.93	225362	225360
2.0 GTE	20SEH; (95kW)	1998	09.86-08.91		
2.0 GTE 16V	20XE; (115kW)	1998	05.88-08.91		
1.5 DT	15DT; (49kW-53kW)	1499	01.87-08.91	225301	
1.6 D	16DA; (40kW)	1598	09.84-08.91	225329 225342	225328 225340
1.7 D	17D; 17DR; (42kW)	1699	01.89-12.91	225329	225328
ASTRA MK III					
1.4i	C14NZ; (44kW)	1389	09.91-09.98	225351	225350
1.4	14NV; (55kW)	1389	09.91-02.98	225322	225320
1.4i	C14SE; (60kW)	1389	03.91-03.01	225353 225356	225352 225355
1.4i 16V	X14XE; (66kW)	1389	01.96-03.01		
1.6i; 1.6i Eco	X16SZ; (52kW)	1598	03.93-02.98		
1.6i	C16NZ; E16NZ; (55kW)	1598	09.91-02.98	225319	225317
1.6i	C16NZ; X16SZR; (55kW)	1598	03.92-09.98	225319	225317
1.6i	X16SZR; (55kW)	1598	01.96-03.01		
1.6 Si; 1.6i	C16SE; (74kW)	1598	03.91-02.98		
1.6i 16V	X16XEL; (74kW)	1598	01.94-09.98		
1.8i	C18NZ; (66kW)	1796	09.91-09.98	225362	225360
1.8i 16V	C18XEL; (85kW)	1796	01.94-02.98		
1.8i 16V	C18XE; (92kW)	1796	09.94-02.98		
1.8 16V	C18XEL; X18XE; (85kW)	1799	11.94-03.01		

RUVILLE YOUR PARTNER

Vauxhall

215321	12	235356			12	265301					215321:(ALV)
	12	235300									
	16	235356			16	265301					
	16	235300 [6]									
	16	235809			16	265809					
215310					16	265302					215310:(ELV)
215311											215311:(ALV)
	24	235301									
	4	235303									235303:(ELV)
	4	235304									235304:(ALV)
					8	265306					
215320	8	235340			8	265306	8	275307	1	295310(N)	
215330	8	235340			8	265306	8	275307	1	295310(N)	
215318	8	235340			8	265306	8	275307	1	295310(N)	
					16	265302					
215340	8	235320			8	265306	8	275307	1	295310(N)	225329: 16DA, (A.T.), 14503757→; 225328: 16DA, (A.T.), 14503757→; 215340: 16D
215360											225329: 16DA, (M.T.), 14498631→; 225328: 16DA, (M.T.), 14498631→; 215340: 16DA, (A.T.), →14503756
											225342: 16D; 225340: 16D; 215340: 16DA, (M.T.), →14498630
											225342: 16DA, (A.T.), →14503756; 225340: 16DA, (A.T.), →14503756; 215360: 16DA, (A.T.), 14503757→
											225342: 16DA, (M.T.), →14498630; 225340: 16DA, (M.T.), →14498630; 215360: 16DA, (M.T.), 14498631→
215301	8	235320			8	265306					
215320	8	235340			8	265306	8	275307	1	295310(N)	
215354	8	235340			8	265306	8	275307	1	295310(N)	
215313	8	235340			8	265306	8	275307	1	295310(N)	
215315	8	235340			8	265306	8	275307	1	295310(N)	
215315	8	235340			8	265306	8	275307	1	295310(N)	225319: →A027024;225317: →A027024;215315: →A027024
215330	8	235340			8	265306	8	275307	1	295310(N)	
215318	8	235340			8	265306	8	275307	1	295310(N)	
215323	8	235340			8	265306	8	275307		[3]	
	8	235340			8	265306	8	275307		[3]	
					16	265302					
215302											
215340	8	235320			8	265306	8	275307	1	295310(N)	225329: 16DA, (A.T.), 14503757→; 225328: 16DA, (A.T.), 14503757→; 215340: 16D
215360											225329: 16DA, (M.T.), 14498631→; 225328: 16DA, (M.T.), 14498631→; 215340: 16DA, (A.T.), →14503756
											225342: 16D; 225340: 16D; 215340: 16DA, (M.T.), →14498630
											225342: 16DA, (A.T.), →14503756; 225340: 16DA, (A.T.), →14503756; 215360: 16DA, (A.T.), 14503757→
											225342: 16DA, (M.T.), →14498630; 225340: 16DA, (M.T.), →14498630; 215360: 16DA, (M.T.), 14498631→
215360	8	235320			8	265306	8	275307	1	295310(N)	
215354	8	235340			8	265306	8	275307	1	295310(N)	
215313	8	235340			8	265306	8	275307	1	295310(N)	
215352	8	235340			8	265306	8	275307	1	295310(N)	225353: →02T14053; 225352: →02T14053; 215352: →02T14053
215355											225356: 02T14054→; 225355: 02T14054→; 215355: 02T14054→
215314					16	265302			2	295310(N)	215314:(ELV)
215303	8	235320			8	265306			1	295310(N)	
215315	8	235340			8	265306	8	275307	1	295310(N)	
215306	8	235340			8	265306	8	275307	1	295310(N)	225319: C16NZ; 225317: C16NZ; 215306: X16SZR
215315											215315: C16NZ
215306	8	235340			8	265306	8	275307	1	295310(N)	215306: X16SZR
	8	235340			8	265306	8	275307	1	295310(N)	
215314					16	265302			2	295310(N)	215314:(ELV)
215323	8	235340			8	265306	8	275307		[3]	
					16	265302			1	295310(N)	
215310					16	265302			1	295310(N)	215310:(ELV)
215311											215311:(ALV)
215310					16	265302			2	295310(N)	215310:(ELV)
215311											215311:(ALV)

3, 6 siehe Klappseite vorn • see fold in front.

RUVILLE
YOUR PARTNER

		cm³			
Vauxhall					
ASTRA MK III					
1.8i 16V	C18XE; (92kW)	1799	06.93-10.94		
2.0i	C20NE; (85kW)	1998	09.91-09.98	225362	225360
2.0i 16V	X20XEV; (100kW)	1998	01.94-09.98		
2.0i 16V	C20XE; (110kW)	1998	09.91-02.98		
1.7 TD	17DT; (60kW)	1686	12.91-09.98	225301	
1.7 D; 1.7 TD	17D; 17DR; X17DTL; (42kW-50kW)	1699-1700	03.91-09.98	225329	225328
ASTRA MK IV					
1.2 16V	X12XE; Z12XE; (48kW-55kW)	1199	02.98-		
1.4 16V	X14XE; Z14XE; (66kW)	1389	02.98-		
1.6	X16SZR; (55kW)	1598	02.98-09.00		
1.6	Z16SE; (62kW)	1598	09.00-		
1.6 Dualfuel	Z16XE; (63kW)	1598	09.02-		
1.6 16V	X16XEL; Z16XE; (74kW)	1598	02.98-		
1.8 16V	X18XE1; (85kW)	1796	02.98-10.00		
1.8 16V; 1.8 16V Dualfuel	Z18XE; (87kW-92kW)	1796	09.00-		
2.0 16V	X20XEV; (100kW)	1998	02.98-		
2.0 16V TURBO; 2.0 TURBO	Z20LET; (140kW-141kW)	1998	09.00-		
2.2 16V	Z22SE; (108kW)	2198	03.00-		
1.7 CDTI 16V; 1.7 DTI 16V	Y17DT; Z17DTL; (55kW-59kW)	1686	02.00-		
1.7 TD	X17DTL; (50kW)	1700	02.98-08.00	225329	225328
2.0 DI	X20DTL; Y20DTL; (60kW)	1995	02.98-		
2.0 DTI 16V	X20DTH; Y20DTH; (74kW)	1995	08.99-		
ASTRA MK V					
1.4	Z14XEP; (66kW)	1364	03.04-		
1.8	Z18XE; (92kW)	1796	03.04-		
2.0 TURBO	Z20LEH; Z20LEL; Z20LER; (125kW-177kW)	1998	03.04-		
1.3 CDTi	Z13DTH; (66kW)	1248	04.05-		
1.7 CDTI	Z17DTH; Z17DTL; (59kW-74kW)	1686	03.04-		
1.9 CDTi; 1.9 LE	Z19DTL; (74kW)	1910	08.05-		
1.9 CDTi	(88kW)	1910	02.05-		
1.9 CDTI	Z19DT; (88kW)	1910	08.05-		
1.9 CDTI; 1.9 CDTI 16V	Z19DTH; Z19DTJ; (88kW-110kW)	1910	04.04-		
ASTRA MK VI					
1.4 i 16v VVT; 1.4 i 16v VVT Turbo	(64kW-103kW)	1364-1398	12.09-		
2.0 CDTi	(118kW)	1956	12.09-		
ASTRAVAN MK III					
1.4i	C14NZ; (44kW)	1389	01.91-10.94	225351	225350
1.6i	X16SZ; (52kW)	1598	02.94-10.96		
1.6i	C16NZ; (55kW)	1598	01.91-08.98	225319	225317
1.7 D; 1.7 TD	17DR; X17DTL; (44kW-50kW)	1699-1700	01.91-08.98	225329	225328
ASTRAVAN MK IV					
1.6i	X16SZR; (55kW)	1598	08.98-09.00		
1.6i	Z16SE; (62kW)	1598	09.00-		
1.7 CDTI; 1.7 DTI	Y17DT; Z17DTL; (55kW-59kW)	1686	04.01-		
1.7 TD	X17DTL; (50kW)	1700	08.98-	225329	225328
2.0 DI	X20DTL; (60kW)	1995	08.98-		
2.0 DTI	Y20DTH; (74kW)	1995	04.04-		
ASTRAVAN MK V					
1.3 CDTi 16V	Z13DTH; (66kW)	1248	08.05-		
1.7 CDTi	Z17DTL; (59kW)	1686	03.05-07.06		
CALIBRA					
2.0i	C20NE; (85kW)	1998	06.90-07.97	225362	225360
2.0i 16V	X20XEV; (100kW)	1998	06.90-07.97		
2.0i 16V	C20XE; (110kW)	1998	06.90-02.94		

RUVILLE YOUR PARTNER

Vauxhall

215310					16	265302			1	295310(N)	215310:(ELV)
215311											215311:(ALV)
215323	8	235340			8	265306	8	275307		[3]	
215310					16	265302			2	295310(N)	215310:(ELV)
215311											215311:(ALV)
215333					16	265302			2	295310(N)	215333:(ELV); 265302: →14137011
215334					16	265312					215334:(ALV), →14137011; 265312: 14137012→
215302											
215360	8	235320			8	265306	8	275307	1	295310(N)	
	16	235356			16	265301					
	16	235300 [6]									
215314					16	265302			2	295310(N)	215314:(ELV); 295310(N): X14XE
215306					8	265306			1	295310(N)	215306: →02HVI800
215307											215307: 02HV1801→
215307					8	265306					
					16	265302					
215304					16	265302			2	295310(N)	215304: Z16XE, (ALV)
215314											215314: Z16XE, (ELV)
					16	265302					
215336					16	265302					215336:(ELV)
215337											215337:(ALV)
					16	265302			2	295310(N)	
					16	265302					
					16	265330					
					16	265307					
215360	8	235320			8	265306	8	275307	1	295310(N)	
					16	265302					
					16	265302					265302: Y20DTH
	16	235356			16	265301					
	16	235300 [6]									
215336					16	265302					215336:(ELV)
215337											215337:(ALV)
					16	265302					
	16	235809			16	265809					
					16	265307					
					8	265802					
	16	235302			16	265809					235302: 17180895→
	16	235807									235807: →17180894
											235807: 04654871→
					8	265802					
	16	235302			16	265809					235302: 17180895→
	16	235807									235807: →17180894
											235807: 04654871→
	16	235356			16	265301					
	16	235300 [6]									
	16	235302			16	265809					235302: A20DTH; 265809: A20DTH
215354	8	235340			8	265306	8	275307	1	295310(N)	
215303	8	235320			8	265306			1	295310(N)	
215315	8	235340			8	265306	8	275307	1	295310(N)	
215360	8	235320			8	265306	8	275307	1	295310(N)	
215306					8	265306			1	295310(N)	215306: →02HVI800
215307											215307: 02HV1801→
215307					8	265306					
					16	265307					
215360	8	235320			8	265306	8	275307	1	295310(N)	
					16	265302					
					16	265302					265302: →17C95189
	16	235809			16	265809					
					16	265307					
215323	8	235340			8	265306	8	275307		[3]	
215310					16	265302			2	295310(N)	215310:(ELV)
215311											215311:(ALV)
215333					16	265302			2	295310(N)	215333:(ELV); 265302: →14137011
215334					16	265312					215334:(ALV), →14137011; 265312: 14137012→

3, 6 siehe Klappseite vorn • see fold in front.

Vauxhall

		cm³			
CALIBRA					
2.0i TURBO	C20LET; (150kW)	1998	03.92-07.97		
2.5i V6	C25XE; X25XE; (125kW)	2498	04.93-07.97		
CARLTON MK II					
1.8 S	18S; (65kW-66kW)	1796	11.82-08.86		
2.0 S	C20NEJ; (74kW)	1998	10.78-08.86		
2.3 D	23D; (52kW)	2260	05.83-08.86		
CARLTON MK III					
1.8; 1.8 N	18NV; E18NVR; (60kW-65kW)	1796	09.86-03.94		
1.8 S; 1.8i	18SEH; 18SV; (66kW-85kW)	1796	09.86-03.94	225362	225360
2.0; 2.0i	C20NEF; C20NEJ; (73kW-74kW)	1998	09.90-03.94		
2.0; 2.0i	20SE; C20NE; (85kW-90kW)	1998	09.86-03.94	225362	225360
2.4i	C24NE; (92kW)	2410	09.88-03.94		
3.0 24V; 3.6 24V Lotus; 3000 24V	C30SE; C30SEJ; C36GET; (147kW-277kW)	2969-3638	09.89-03.94		
2.3 D	23YD; (54kW)	2260	09.86-03.94		
CAVALIER					
1.3	13N; (44kW)	1297	08.77-08.81	225306	225304
1.6 N	16N; (44kW)	1584	08.75-08.81	225313	225311
1.6 S; 1600	16S; (55kW)	1584	08.75-08.81		
2.0 S; 2000	20S; (74kW)	1979	08.77-08.81		
CAVALIER MK II					
1.3 N; 1.3 S	13N; 13S; (44kW-55kW)	1297	09.81-08.88	225306	225304
1.6 N	16N; (55kW)	1598	09.81-08.88	225313	225311
1.6i	C16LZ; C16NZ; E16NZ; (55kW)	1598	08.86-08.88	225319	225317
1.6; 1.6 S	16S; 16SH; (66kW)	1598	09.81-08.88	225313	225311
1.8	E18NV; (62kW)	1796	08.86-08.88		
1.8i; 1800i	18E; 18SE; C18NE; (74kW-85kW)	1796	09.81-10.88	225334	
2.0i; 2000i	20NE; 20SE; C20NE; (85kW-90kW)	1998	09.86-08.88	225362	225360
2.0 SRi 130; 2.0i	20SEH; (95kW)	1998	03.87-08.88		
1.6 D; 1600D	16D; 16DA; (40kW)	1598	03.82-08.88	225329 225342	225328 225340
CAVALIER MK III					
1.4	14NV; (55kW)	1389	09.88-11.95	225322	225320
1.6i	X16SZ; (52kW)	1598	09.93-11.95		
1.6i	E16NZ; (55kW)	1598	09.88-11.95	225319	225317
1.6	16SV; (60kW)	1598	09.88-05.93	225319	225317
1.8; 1.8i; 2.0i	18SV; 20NE; C18NZ; C20NE; (66kW-85kW)	1796-1998	09.88-11.95	225362	225360
2.0i	20SEH; (95kW)	1998	09.88-09.92		
2.0i 16V	X20XEV; (100kW)	1998	09.93-11.95		
2.0i 16V	C20XE; (110kW)	1998	09.88-11.95		
2.0i TURBO	C20LET; (150kW)	1998	06.92-11.94		
2.5 V6	C25XE; (125kW)	2498	02.93-11.95		
1.7 TD	17DT; (60kW)	1686	09.88-11.95	225301	
1.7 D	17D; 17DR; (42kW-44kW)	1699-1700	09.88-11.95	225329	225328
CHEVETTE					
1.2	13N; 13S; (39kW-42kW)	1256	03.75-12.85	225306	225304
COMBO					
1.2	C12NZ; X12SZ; (33kW)	1195	07.94-10.01	225398	225395
1.4	Z14XEP; (66kW)	1364	01.04-		
1.4	C14NZ; (44kW)	1389	07.94-10.01	225351	225350
1.4	C14SE; (60kW)	1389	07.94-10.01	225353 225356	225352 225355
1.6	Z16SE; (64kW)	1598	10.01-		
1.3 CDTI 16V	Z13DTJ; (55kW)	1248	10.05-		
1.7 D	17D; X17D; (44kW)	1686	07.94-10.01	225329	225328
1.7 DI 16V; 1.7 DTI 16V	Y17DT; Y17DTL; (48kW-55kW)	1686	09.01-		

RUVILLE YOUR PARTNER

Vauxhall

					16	265312	16	275307	2	295310(N)	
					24	265302					
	8	235340			8	265306	8	275307	1	295310(N)	
					8	265306					
215329											215329: 121527→
215399	8	235340			8	265306	8	275307		[3]	
215323	8	235340			8	265306	8	275307		[3]	
					8	265306					
215323	8	235340			8	265306	8	275307		[3]	
215397											
					24	265312					
215329											
215320	8	235340			8	265306	8	275307	1	295310(N)	
215330	8	235340			8	265306	8	275307	1	295310(N)	
					8	265306					
215325											
215320	8	235340			8	265306	8	275307	1	295310(N)	
215330	8	235340			8	265306	8	275307	1	295310(N)	
215315	8	235340			8	265306	8	275307	1	295310(N)	
215330	8	235340			8	265306	8	275307	1	295310(N)	
215399	8	235340			8	265306	8	275307		[3]	
215318	8	235340			8	265306	8	275307	1	295310(N)	
215323	8	235340			8	265306	8	275307		[3]	
	8	235340			8	265306	8	275307		[3]	
215340	8	235320			8	265306	8	275307	1	295310(N)	225329: 16DA, (A.T.), 14503757→; 225328: 16DA, (A.T.), 14503757→; 215340: 16D
215360											225329: 16DA, (M.T.), 14498631→; 225328: 16DA, (M.T.), 14498631→; 215340: 16DA, (A.T.), →14503756
											225342: 16D; 225340: 16D; 215340: 16DA, (M.T.), →14498630
											225342: 16DA, (A.T.), →14503756; 225340: 16DA, (A.T.), →14503756; 215360: 16DA, (A.T.), 14503757→
											225342: 16DA, (M.T.), →14498630; 225340: 16DA, (M.T.), →14498630; 215360: 16DA, (M.T.), 14498631→
215313	8	235340			8	265306	8	275307	1	295310(N)	
215303	8	235320			8	265306			1	295310(N)	
215315	8	235340			8	265306	8	275307	1	295310(N)	
215315	8	235340			8	265306	8	275307	1	295310(N)	225319: →A027024;225317: →A027024;215315: →A027024
215323	8	235340			8	265306	8	275307		[3]	
	8	235340			8	265306	8	275307		[3]	
215310					16	265302			2	295310(N)	215310:(ELV)
215311											215311:(ALV)
215333					16	265302			2	295310(N)	215333:(ELV); 265302: →14137011
215334					16	265312					215334:(ALV), →14137011; 265312: 14137012→
					16	265302	16	275307	2	295310(N)	265302: →14003804
					16	265312					265312: 14003805→
					24	265302					
215302											
215360	8	235320			8	265306	8	275307	1	295310(N)	
215320	8	235340			8	265306	8	275307	1	295310(N)	
215312	8	235340			8	265306			1	295310(N)	225398: C12NZ; 225395: C12NZ; 215312: X12SZ
215398											215398: C12NZ
	16	235356			16	265301					
	16	235300 [6]									
215354	8	235340			8	265306	8	275307	1	295310(N)	
215352	8	235340			8	265306	8	275307	1	295310(N)	225353: →02T14053; 225352: →02T14053; 215352: →02T14053
215355											225356: 02T14054→; 225355: 02T14054→; 215355: 02T14054→
215307					8	265306					
	16	235809			16	265809					
215360	8	235320			8	265306	8	275307	1	295310(N)	
					16	265307					

3, 6 siehe Klappseite vorn • see fold in front.

RUVILLE
YOUR PARTNER

		cm³			
Vauxhall					
COMBO					
1.7 CDTI 16V	Z17DTH; (74kW)	1686	12.04-	225303	
CORSA					
1.0i 12V	X10XE; (40kW)	973	11.96-09.00		
1.2i	C12NZ; X12SZ; (33kW)	1195	03.93-09.00	225398	225395
1.2i 16V	X12XE; (48kW)	1199	03.98-09.00		
1.4i	C14NZ; X14SZ; (44kW)	1389	03.93-09.00	225351	225350
1.4i S	C14SE; (60kW)	1389	03.93-09.00	225353 225356	225352 225355
1.4i 16V	X14XE; (66kW)	1389	09.94-		
1.6i 16V	X16XE; (78kW)	1598	09.94-09.00		
1.6 GSI 16V	C16XE; (80kW)	1598	03.93-09.00		
1.5 D; 1.5 TD	15D; 15DT; X15DT; (37kW-49kW)	1488	03.93-09.00	225301	
1.7 D	17D; X17D; (44kW)	1686	02.96-09.00		
CORSA MK II					
1.0 12V	Z10XE; (43kW)	973	09.00-		
1.0 12V	Z10XEP; (44kW)	998	11.03-		
1.2 16V; 1.2 16V Dualfuel	Z12XE; (55kW)	1199	09.00-		
1.4 16V	Z14XE; (66kW)	1389	09.00-		
1.8 16V	Z18XE; (92kW)	1796	09.00-		
1.3 CDTI 16V	Z13DT; (52kW)	1248	04.04-		
1.7 CDTI 16V; 1.7 DTI 16V	Y17DT; Y17DTL; Z17DTH; (48kW-74kW)	1686	09.00-		
CORSA MK III					
1.0	Z10XEP; (44kW)	998	07.06-		
1.2; 1.4	Z12XEP; Z14XEP; (59kW-66kW)	1229-1364	07.06-		
1.3 CDTI	Z13DTH; Z13DTJ; (55kW-66kW)	1248	07.06-		
CORSAVAN					
1.4i	C14NZ; (44kW)	1389	01.94-09.00	225351	225350
1.7 D	17D; X17D; (44kW)	1686	01.94-09.00		
CORSAVAN MK II					
1.2 16V; 1.2 16V Dualfuel	Z12XE; (55kW)	1199	09.00-		
1.3 CDTI 16V	Z13DT; (52kW)	1248	04.04-		
1.7 DI 16V; 1.7 DTI 16V	Y17DT; Y17DTL; (48kW-55kW)	1686	09.00-		
FRONTERA					
2.0i	C20NE; X20SE; (85kW)	1998	03.92-10.98	225362	225360
2.2i	X22XE; (100kW)	2198	03.95-10.98		
FRONTERA MK II					
2.2i	X22SE; Y22SE; (100kW)	2198	10.98-		
2.2 DTI	X22DTH; Y22DTH; (85kW)	2171	10.98-		
INSIGNIA					
2.0 Turbo	A20NHT; (162kW)	1998	07.08-		
2.8 V6 Turbo	A28NET; (191kW)	2792	07.08-		
2.0 CDTI	A20DTC; A20DTH; A20DTJ; (81kW-118kW)	1956	07.08-		
MERIVA					
1.4 16V Twinport	Z14XEP; (66kW)	1364	07.04-		
1.6i	Z16SE; (64kW)	1598	05.03-		
1.6i 16V	Z16XE; (74kW)	1598	05.03-		
1.6 TURBO	Z16LET; (132kW)	1598	05.06-		
1.8i 16V	Z18XE; (92kW)	1796	05.03-		
1.3 CDTI	Z13DTJ; (55kW)	1248	09.03-		
1.7 CDTI 16V	Z17DTH; (74kW)	1686	04.04-		

RUVILLE YOUR PARTNER

Vauxhall

215308					16	265307					215308:(ALV)
215309											215309:(ELV)
215321	12	235356			12	265301					215321:(ALV)
	12	235300									
215312	8	235340			8	265306			1	295310(N)	225398: C12NZ; 225395: C12NZ; 215312: X12SZ
215398											215398: C12NZ
	16	235356			16	265301					
	16	235300 [6]									
215354	8	235320			8	265306	8	275307	1	295310(N)	225351: C14NZ; 225350: C14NZ; 215354: C14NZ; 295310(N): C14NZ; 275307: C14NZ
215352	8	235340			8	265306	8	275307	1	295310(N)	225353: →02T14053; 225352: →02T14053; 215352: →02T14053
215355											225356: 02T14054→; 225355: 02T14054→; 215355: 02T14054→
215314					16	265302			2	295310(N)	215314:(ELV)
					16	265302			2	295310(N)	
215314					16	265302					
215302											
					8	265306					
215321	12	235356			12	265301					215321:(ALV)
	12	235300									
	12	235356			12	265301					
	12	235300 [6]									
	16	235356			16	265301					
	16	235300 [6]									
215314					16	265302					215314:(ELV)
215336					16	265302					215336:(ELV)
215337											215337:(ALV)
	16	235809			16	265809					
					16	265307					
215321	12	235356			12	265301					215321:(ALV)
	12	235300									
	16	235356			16	265301					
	16	235300 [6]									
	16	235809			16	265809					
215354	8	235340			8	265306	8	275307	1	295310(N)	
					8	265306					
	16	235356			16	265301					
	16	235300 [6]									
	16	235809			16	265809					
					16	265307					
215323	8	235320			8	265306	8	275307		[3]	225362: C20NE; 225360: C20NE; 215323: C20NE; 295310(N): C20NE; 295340(N): C20NE; 275307: C20NE
									2	295310(N)	295310(N): X20SE
215310					16	265302			2	295310(N)	215310:(ELV)
215311											215311:(ALV)
					8	265302					
					16	265302					265302: →17C95189
					16	265330					
	24	235301			24	265330					
	16	235302			16	265809					
	16	235356			16	265301					
	16	235300 [6]									
215307					8	265306					
215314					16	265302					215314:(ELV)
215314											215314:(ELV)
215336					16	265302					215336:(ELV)
215337											215337:(ALV)
	16	235809			16	265809					
					16	265307					

3, 6 siehe Klappseite vorn • see fold in front.

RUVILLE
YOUR PARTNER

		cm³			
Vauxhall					
MOVANO					
2.8 DTI; 2.8 TDI	S9W702; (84kW)	2799	10.98-10.01		
NOVA					
1.2i	C12NZ; (33kW)	1195	09.89-03.93	225398	225395
1.2 N; 1.2i	12NC; E12GV; (33kW)	1196	01.85-10.89		
1.2 N	12NV; (38kW)	1196	01.90-03.93		
1.2; 1.2 S	12ST; (40kW)	1196	09.82-02.90	225302	225300
1.3i	13NB; (44kW)	1297	09.85-10.89	225306	225304
1.3i	C13N; (44kW)	1297	09.89-03.93	225319	225317
1.3 S	13SB; (51kW)	1297	09.82-10.89	225306	225304
1.4i	C14NZ; (44kW)	1389	01.90-03.93	225351	225350
1.4; 1.4 S	14NV; (55kW)	1389	01.90-03.93	225322	225320
1.4i S	C14SE; (60kW)	1389	09.91-03.93	225353 225356	225352 225355
1.6 GSI	C16SEI; (72kW)	1598	09.89-03.93		
1.6 GSI	E16SE; (74kW)	1598	05.88-03.92	225327	225325
1.6 GSI	C16SE; (74kW)	1598	02.92-03.93		
1.5 D; 1.5 TD	15D; 15DT; (37kW-49kW)	1488	09.87-03.93	225301	
NOVAVAN					
1.2	12NV; (38kW)	1196	01.90-10.94		
1.5 D	15D; (37kW)	1488	01.91-10.94	225301	
OMEGA					
2.0	20SE; (85kW)	1998	03.94-12.00	225362	225360
2.0i	X20SE; (85kW)	1998	03.94-09.99		
2.0 16V; 2.0i 16V	X20XEV; (100kW)	1998	03.94-09.99		
2.2i	Y22XE; Z22XE; (106kW)	2198	09.99-		
2.5i; 2.6 V6	X25XE; Y26SE; (125kW-132kW)	2498-2597	03.94-		
3.0 MV 6; 3.0 MV6; 3.2 V6	X30XE; Y32SE; (155kW-160kW)	2962-3175	04.94-		
2.0 DTI 16V; 2.0 TDi 16V; 2.2 DTI 16V	X20DTH; Y22DTH; (74kW-88kW)	1995-2171	10.98-		
2.5 TD	25DT; X25DT; (96kW)	2497	04.94-02.01	225028	
2.5 DTI 24V	Y25DT; (110kW)	2497	09.01-		
ROYALE					
2.8; 2.9; 2.9 E; 3.0	28H; 30E; (103kW-132kW)	2784-2969	02.78-12.86		
SENATOR					
3.0i	30E; (132kW)	2968	09.84-12.86		
SENATOR MK II					
3.0 24V	C30SE; (150kW)	2969	09.89-09.93		
SIGNUM					
1.8	Z18XE; (90kW)	1796	06.03-07.05		
2.0i TURBO; 2.2i	Z20NET; Z22YH; (114kW-129kW)	1998-2198	05.03-		
2.8 V6 TURBO	Z28NEL; (169kW)	2792	08.05-		
3.2 V6	Z32SE; (155kW)	3175	05.03-		
1.9 CDTI	Z19DT; (88kW)	1910	04.04-		
1.9 CDTI 16V	Z19DTH; (110kW)	1910	04.04-		
2.0 DTI	Y20DTH; (74kW)	1994	05.03-		
2.2 DTI	Y22DTR; (92kW)	2188	05.03-		
SINTRA					
2.2i 16V	X22XE; (104kW)	2198	11.96-04.99		
3.0i 24V	X30XE; (148kW)	2962	11.96-04.99		
2.2 DTI	X22DTH; (85kW)	2171	07.97-04.99		
SPEEDSTER (VX220)					
2.0 i TURBO	Z20LET; (147kW)	1998	04.03-		
2.2 16V	Z22SE; (108kW)	2198	09.00-		
TIGRA					
1.4	Z14XEP; (66kW)	1364	06.04-		
1.4 16V	X14XE; (66kW)	1389	07.94-		
1.6 16V	X16XE; (78kW)	1598	07.94-		
1.8	Z18XE; (92kW)	1796	06.04-		
1.3 CDTI	Z13DT; (51kW)	1248	06.04-		

RUVILLE YOUR PARTNER

Vauxhall

215801											
215398	8	235340			8	265306			1	295310(N)	
	8	235340			8	265306	8	275307			235340: 12NC; 265306: 12NC; 275307: 12NC
					8	265306					
215301	8	235340			8	265306	8	275307	1	295310(N)	
215320	8	235340			8	265306	8	275307	1	295310(N)	
215315	8	235340			8	265306	8	275307	1	295310(N)	
215320	8	235340			8	265306	8	275307			
215354	8	235340			8	265306	8	275307	1	295310(N)	
215313	8	235340			8	265306	8	275307	1	295310(N)	
215352	8	235340			8	265306	8	275307	1	295310(N)	225353: →02T14053; 225352: →02T14053; 215352: →02T14053
215355											225356: 02T14054→; 225355: 02T14054→; 215355: 02T14054→
					8	265306					
215316	8	235340			8	265306	8	275307			
	8	235340			8	265306	8	275307	1	295310(N)	
215302											
					8	265306					
215302											
215323	8	235340			8	265306	8	275307		[3]	
					8	265306			2	295310(N)	
					16	265302			2	295310(N)	
					16	265302					
215331					24	265302					215331:(ALV)
215335											215335:(ELV)
					24	265302					
					16	265302					
215025					12	265007					
	24	235003			24	265002					
	24	235000 [6]									
215332											
215332											
					24	265312					
215336											215336:(ELV)
215337											215337:(ALV)
					16	265330					
	24	235301									
					24	265302					
					8	265802					
	16	235302			16	265809					235302: 17180895→
	16	235807									235807: →17180894
											235807: 04654871→
					16	265302					265302: →17C95189
					16	265302					
215310					16	265302			2	295310(N)	215310:(ELV)
215311											215311:(ALV)
					24	265302					
					24	265302					
					16	265302					
					16	265330					
	16	235356			16	265301					
	16	235300 [6]									
215314					16	265302			2	295310(N)	215314:(ELV)
215314					16	265302			2	295310(N)	
215336					16	265302					215336:(ELV)
215337											215337:(ALV)
	16	235809			16	265809					

3, 6 siehe Klappseite vorn • see fold in front.

		cm³			
Vauxhall					
VECTRA					
1.6i	X16SZR; (55kW)	1598	10.95-		
1.6i 16V	X16XEL; Y16XE; Z16XE; (74kW)	1598	10.95-		
1.8i 16V	X18XE; X18XE1; (85kW)	1796	10.95-09.00		
1.8i 16V	Z18XE; (92kW)	1796	09.00-		
2.0i 16V	X20XEV; (100kW)	1998	10.95-09.00		
2.2i 16V	Z22SE; (108kW)	2198	09.00-		
2.5i V6	X25XE; (125kW)	2498	10.95-09.00		
2.5i GSi	X25XE; (143kW)	2498	05.98-09.99		
2.6i V6	Y26SE; (125kW)	2597	09.00-		
1.7 TD	X17DT; (60kW)	1686	10.95-11.96	225301	
2.0 DI 16V; 2.0 DTI 16V; 2.2 DTI 16V	X20DTH; X20DTL; Y20DTH; Y22DTR; (60kW-92kW)	1995-2172	11.96-		
VECTRA MK II					
1.6 16V	Z16XE; (74kW)	1598	06.04-		
1.8	(81kW)	1796	04.02-		
1.8 16V; 1.8 16V Dualfuel	Z18XE; (90kW)	1796	04.02-		
2.0 16V TURBO; 2.2 16V; 2.2 direct	Z20NET; Z22SE; Z22YH; (108kW-129kW)	1998-2198	04.02-		
2.8 V6 TURBO	Z28NEL; Z28NET; (169kW-188kW)	2792	08.05-		
3.2 V6	Z32SE; (155kW)	3175	08.02-		
1.9 CDTI	Z19DT; Z19DTL; (74kW-88kW)	1910	04.04-		
1.9 CDTI 16V	Z19DTH; (110kW)	1910	04.04-		
2.0 DTI 16V; 2.2 DTI 16V	Y20DTH; Y22DTR; (74kW-92kW)	1995-2172	04.02-		
VIVARO					
2.0 16V	F4R720; (88kW)	1998	08.01-		
2.0 CDTI	M9R780; M9R782; (66kW-84kW)	1995	01.06-		
ZAFIRA					
1.6 CNG	(71kW)	1598	09.01-06.05		
1.6 16V	X16XEL; (74kW)	1598	04.99-		
1.8 16V	X18XE1; (85kW)	1796	04.99-09.00		
1.8 16V	Z18XE; (92kW)	1796	09.00-		
2.0 GSI TURBO	Z20LET; (141kW)	1998	09.01-		
2.2 16V	Z22SE; (108kW)	2198	09.00-		
2.0 DI 16V; 2.0 DTI 16V	X20DTL; Y20DTH; (60kW-74kW)	1995	04.99-		
ZAFIRA MK II					
2.0	Z20LEH; Z20LER; (147kW-177kW)	1998	07.05-		
2.2	Z22YH; (110kW)	2198	07.05-		
1.9 CDTI	Z19DT; (88kW)	1910	07.05-		
1.9 CDTI	Z19DTH; (110kW)	1910	07.05-		
Volkswagen					
BORA (1J2,1J6)					
1.4 16V	AHW; AKQ; APE; AXP; BCA; (55kW)	1390	03.00-05.05		
1.6	AEH; AKL; APF; (74kW)	1595	10.98-05.05		
1.6	AVU; BFQ; BJH; (75kW)	1595	08.00-05.05		
1.6 16V; 1.6 FSI	ATN; AUS; AZD; BAD; BCB; (77kW-81kW)	1598	02.00-05.05		
1.8	AGN; BAF; (92kW)	1781	10.98-05.05		
1.8; 1.8 T	AGU; ARX; AUM; BAE; (110kW)	1781	05.00-05.05		
1.8 T	AUQ; (132kW)	1781	03.02-05.05		
2.0	APK; AQY; AZG; AZH; AZJ; BBW; (85kW)	1984	10.98-05.05		
2.3 V5; 2.3 VR5	AGZ; (110kW)	2324	10.98-10.00		
2.3 V5	AQN; (125kW)	2324	10.00-05.05		
2.8 V6; 2.8 VR6	AQP; AUE; BDE; (150kW)	2792	03.99-05.05		
1.9 SDI	AGP; AQM; (50kW)	1896	10.98-05.05		

RUVILLE YOUR PARTNER

Vauxhall → Volkswagen

215306					8	265306			1	295310(N)	215306: →02HVI800
215307											215307: 02HV1801→
					16	265302			2	295310(N)	295310(N): X16XEL
215310					16	265302			2	295310(N)	215310:(ELV); 295310(N): X18XE
215311											215311:(ALV)
215336					16	265302					215336:(ELV)
215337											215337:(ALV)
					16	265302			2	295310(N)	
					16	265330					
215331					24	265302					215331:(ALV)
215335											215335:(ELV)
					24	265302					
215331					24	265302					215331:(ALV)
215302											
					16	265302					
215314					16	265302					215314:(ELV)
					16	265302					265302: Z18XEL
215336					16	265302					215336:(ELV)
215337											215337:(ALV)
					16	265330					
	24	235301			24	265330					
					24	265302					
					8	265802					
	16	235302			16	265809					235302: 17180895→
	16	235807									235807: →17180894
											235807: 04654871→
					16	265302					
	16	235501			16	265503					
	16	235500 [6]									
	16	235502			16	265165					
					16	265302					
215314					16	265302			2	295310(N)	215314:(ELV)
					16	265302					
215336					16	265302					215336:(ELV)
215337											215337:(ALV)
					16	265302					
					16	265330					
					16	265302					
					16	265302					
					16	265330					
					8	265802					
	16	235302			16	265809					235302: 17180895→
	16	235807									235807: →17180894
											235807: 04654871→

	16	235410			16	265402			2	295402(N)	235410: AHW; AXP; BCA; 265402: AHW; AXP; BCA
	16	235400 [6]									235400: AHW; AXP; BCA
215424					8	265427			1	295401(N)	
	8	235409			8	265165			1	295401(N)	235409: AVU; BFQ; 265165: AVU; BFQ
	8	235402 [6]									235402: AVU; BFQ
	16	235410			16	265402					
	16	235400 [6]									
					12	265704			1	295401(N)	265704:(ELV)
					8	265705					265705:(ALV)
					12	265704			2	295401(N)	265704:(ELV), AGU, AUM
					8	265705					265705:(ALV), AGU, AUM
					12	265704			2	295401(N)	265704:(ELV)
					8	265705					265705:(ALV)
					8	265427			1	295401(N)	
					10	265426					
	20	235701			20	265703					
	24	235701			24	265703					
215403					8	265427			1	295401(N)	295401(N): 1#300001→
									1	295405(N)	295405(N): →1#300000

6 siehe Klappseite vorn • see fold in front.

		cm³			
Volkswagen					
BORA (1J2,1J6)					
1.9 TDI	AGR; ALH; (66kW)	1896	10.98-06.01		
1.9 TDI	ATD; AXR; (74kW)	1896	09.00-05.05		
1.9 TDI	AHF; ASV; (81kW)	1896	10.98-06.01		
1.9 TDI	AJM; AUY; (85kW)	1896	12.98-06.01		
1.9 TDI	ASZ; (96kW)	1896	11.00-05.05		
1.9 TDI	ARL; (110kW)	1896	05.00-05.05		
CADDY I					
1.5	JB; (51kW)	1457	08.82-07.83		
1.6	EW; (55kW)	1595	01.83-07.92		
1.8	JH; (70kW)	1781	08.85-07.92		
1.6 D	JK; ME; (40kW)	1588	08.82-07.92	225401	
CADDY II					
1.4; 60 1.4	AEX; AKV; APQ; AUD; (44kW)	1390	11.95-01.04		
1.4; 1.4 16V	AUA; (55kW)	1390	08.00-01.04		
1.6; 75 1.6	1F; (55kW)	1595	11.95-05.97		
1.6; 75 1.6	AEE; (55kW)	1598	11.95-12.00		
1.7 SDI	AHB; (42kW)	1716	07.96-09.00	225404	
1.9 D	1Y; AEF; (47kW)	1896	11.95-01.04	225419	
1.9 SDI	AEY; AYQ; (47kW)	1896	11.95-01.04	225404	
1.9 TDI	1Z; AHU; ALH; (66kW)	1896	09.96-01.04	225403	
1.9 TDI	AHU; ALE; ALH; (66kW)	1896	10.96-01.04	225403	
CADDY III					
1.4	BCA; (55kW)	1390	03.04-		
1.4 16V	BUD; (59kW)	1390	05.06-		
1.6	BGU; BSE; BSF; (75kW)	1595	04.04-		
2.0 EcoFuel	BSX; (80kW)	1984	04.06-		
1.9 TDI	BSU; (55kW)	1896	09.05-		
1.9 TDI	BJB; BLS; (77kW)	1896	04.04-		
1.9 TDI	BLS; (77kW)	1896	05.08-		
2.0 SDI	BDJ; BST; (51kW)	1968	03.04-		
2.0 TDI	BMM; (103kW)	1968	09.07-		

RUVILLE YOUR PARTNER

Volkswagen

215402					8	265427			1	295401(N)	295401(N): 1#300001→
									1	295405(N)	295405(N): →1#300000
215404					8	265401			1	295401(N)	265401: →2#700000
					8	265403					265403: 3#000001→
215402					8	265427			1	295405(N)	215402: AHF
215404					8	265401			1	295401(N)	
215404					8	265401			1	295401(N)	265401: →2#700000
					8	265403					265403: 3#000001→
					8	265401					265401: →2#700000
					8	265403					265403: 3#000001→
215410					8	265430			1	295405(N)	
									1	295404(K)	295404(K):(GS)
									1	295405(K)	295405(K):(ST)
									1	295406(K)	295406(K):(GS), (mG)
215425					8	265426 [1]			1	295405(N)	265430: →F#020000; 265426: G#000001→
									1	295404(K)	295404(K):(GS)
									1	295405(K)	295405(K):(ST)
									1	295406(K)	295406(K):(GS), (mG)
					8	265426 [1]			1	295405(N)	265430: →H#020000; 265426: J#000001→
									1	295404(K)	295404(K):(GS)
									1	295405(K)	295405(K):(ST)
									1	295406(K)	295406(K):(GS), (mG)
215420					8	265426 [1]			1	295405(N)	265430: →F#020000; 265426: G#000001→
									1	295404(K)	295404(K):(GS)
									1	295405(K)	295405(K):(ST)
									1	295406(K)	295406(K):(GS), (mG)
					8	265402					265402: AUD
					8	265427					265427: AEX; APQ; AKV
	16	235410			16	265402			1	295402(N)	
	16	235400 [6]									
215425					8	265427					
					8	265427			1	295405(N)	
									1	295403(K)	295403(K):(ST), AEE, 562758→
									1	295404(K)	295404(K):(GS), 1F
									1	295405(K)	295404(K):(GS), AEE, →562757
									1	295406(K)	295405(K):(ST), 1F
											295405(K):(ST), AEE, →562757
											295406(K):(GS), 1F, (mG)
											295406(K):(GS), AEE, →562757, (mG)
215411					8	265426			1	295404(K)	295404(K):(GS), →005000
									1	295405(K)	295405(K):(ST)
									1	295406(K)	295406(K):(GS), →005000, (mG)
215419					8	265426			1	295405(N)	
									1	295404(K)	295404(K):(GS)
									1	295405(K)	295405(K):(ST)
									1	295406(K)	295406(K):(GS), (mG)
215403					8	265426			1	295404(K)	225404: AEY; 215403: AYQ; 265426: AEY;
											295404(K):(GS), AEY, →050000
215411					8	265427			1	295405(K)	215411: AEY; 265427: AYQ; 295405(K):(ST)
									1	295406(K)	295406(K):(GS), AEY, →050000, (mG)
215402					8	265426			1	295405(N)	225403: 1Z; AHU; 215402: ALH; 265426: 1Z; AHU
215409					8	265427			1	295404(K)	215409: 1Z; AHU; 265427: ALH; 295404(K):(GS), AHU
									1	295405(K)	295404(K):(GS), ALE, →576000
									1	295406(K)	295405(K):(ST)
											295406(K):(GS), AHU, (mG)
											295406(K):(GS), ALE, →576000, (mG)
215402					8	265426			1	295405(N)	225403: ALE; AHU; 215402: ALH; 265426: ALE; AHU
215409					8	265427					215409: ALE; AHU; 265427: ALH
					16	265402					
	16	235410			16	265402					
	16	235400 [6]									
	8	235409			8	265165			1	295401(N)	
	8	235402 [6]									
					16	265427					
					8	265403					
215404					8	265403					215404: BJB
					8	265403					
215429					8	265403					
					8	265403					

1, 6 siehe Klappseite vorn • see fold in front.

		cm³			
Volkswagen					
CORRADO (53I)					
1.8 16V	KR; (100kW)	1781	04.89-07.92		
1.8 G60	PG; (118kW)	1781	09.88-09.93		
2.0i	2E; ADY; (85kW)	1984	04.93-12.95		
2.0i 16V	9A; (100kW)	1984	08.91-12.95		
2.9 VR6	ABV; (140kW)	2861	08.91-12.95		
CRAFTER 30-35, 30-50 (2E)					
2.5 TDI	BJJ; BJK; BJL; BJM; (65kW-120kW)	2461	04.06-		
DERBY (86)					
0.9; 1.3	HA; HH; (29kW-44kW)	895-1272	02.77-09.81		
1.1	HB; (37kW)	1093	02.77-09.81		
1.3	HJ; (43kW)	1272	02.77-09.81		
DERBY (86C, 80)					
1.0	GL; (29kW)	1043	10.81-12.84		
1.0	HZ; (33kW)	1043	08.81-12.84		
1.1; 1.3	GK; HB; HH; HK; (37kW-55kW)	1093-1272	08.81-12.84		
EOS					
1.4 TSI; 1.6 FSI	BLF; CAVD; CAXA; (85kW-118kW)	1390-1598	06.06-		
2.0 FSI	BPY; BVY; BVZ; BWA; CAWB; CBFA; CCTA; CCZA; (110kW-147kW)	1984	03.06-		
2.0 TSI	CCZB; (155kW)	1984	11.09-		
3.2 FSI; 3.6 V6	BUB; CBRA; CDVA; (184kW-191kW)	3189-3597	06.06-		
2.0 TDI	BMM; (103kW)	1968	06.06-		
FOX (5Z1)					
1.0; 1.0 Total Flex; 1.4; 1.6; 1.6 Total Flex	BAH; BJA; BKR; BLH; BPA; CCNA; CCRA; (54kW-74kW)	999-1599	10.03-		
1.2	BMD; (40kW)	1198	04.05-		
1.4 TDI	BNM; (51kW)	1422	04.05-		
1.9 D	ASY; (47kW)	1896	12.07-		
GOLF I					
1.1; 1.3	FA; FJ; GF; GG; HC; (37kW-44kW)	1093-1272	04.74-07.83		
1.5	JB; (51kW)	1457	08.77-11.83		
1.5	FH; (51kW)	1471	04.74-12.75		
1.6	EM; FN; FP; (55kW)	1588	08.75-02.84		

RUVILLE YOUR PARTNER

Volkswagen

					16	265426			1	295405(N)	
									1	295404(K)	295404(K):(GS)
									1	295405(K)	295405(K):(ST)
									1	295406(K)	295406(K):(GS), (mG)
					8	265426			1	295405(N)	
									1	295404(K)	295404(K):(GS)
									1	295405(K)	295405(K):(ST)
									1	295406(K)	295406(K):(GS), (mG)
					8	265426			1	295405(N)	265426: 2E, →565664
					8	265427			1	295404(K)	265426: ADY, →000778; 295404(K):(GS)
									1	295405(K)	265427: 2E, 565665→; 295405(K):(ST)
									1	295406(K)	265427: ADY, 000779→; 295406(K):(GS), (mG)
					16	265426			1	295405(N)	
									1	295404(K)	295404(K):(GS)
									1	295405(K)	295405(K):(ST)
									1	295406(K)	295406(K):(GS), (mG)
					12	265426			1	295404(K)	295404(K):(GS)
									1	295406(K)	295406(K):(GS), (mG)
					10	265426					
									1	295405(N)	
									1	295404(K)	295404(K):(GS)
									1	295405(K)	295405(K):(ST)
									1	295406(K)	295406(K):(GS), (mG)
									1	295405(N)	
									1	295404(K)	295404(K):(GS)
									1	295405(K)	295405(K):(ST)
									1	295406(K)	295406(K):(GS), (mG)
									1	295404(K)	295404(K):(GS)
									1	295405(K)	295405(K):(ST)
									1	295406(K)	295406(K):(GS), (mG)
									1	295405(N)	
									1	295404(K)	295404(K):(GS)
									1	295405(K)	295405(K):(ST)
									1	295406(K)	295406(K):(GS), (mG)
					8	265426					
									1	295405(N)	
									1	295404(K)	295404(K):(GS)
									1	295405(K)	295405(K):(ST)
									1	295406(K)	295406(K):(GS), (mG)
	16	235404			16	265402					
	16	235408			16	265165					
	16	235700			16	265707					
	24	235701			24	265703					
					16	265403					
	8	235455			8	265402					
	8	235453 [6]									
					6	265402					
215406					6	265401					265401: →64028600
					6	265403					265403: 64028601→
					8	265427					
									1	295405(N)	
									1	295404(K)	295404(K):(GS)
									1	295405(K)	295405(K):(ST)
									1	295406(K)	295406(K):(GS), (mG)
215410					8	265430			1	295405(N)	
									1	295404(K)	295404(K):(GS)
									1	295405(K)	295405(K):(ST)
									1	295406(K)	295406(K):(GS), (mG)
					8	265430			1	295405(N)	
									1	295404(K)	295404(K):(GS)
									1	295405(K)	295405(K):(ST)
									1	295406(K)	295406(K):(GS), (mG)
215410					8	265430			1	295405(N)	
									1	295404(K)	295404(K):(GS)

6 siehe Klappseite vorn • see fold in front.

RUVILLE
YOUR PARTNER

		cm³			

Volkswagen

GOLF I					
1.6	EM; FN; FP; (55kW)	1588	08.75-02.84		
1.6; 1.6 GTI	EG; (81kW)	1588	08.76-07.82		
1.6	RE; (53kW)	1595	04.86-02.90		
1.6	EW; HN; (55kW)	1595	01.83-04.92		
1.8	EX; (66kW)	1781	08.83-09.92		
1.8	JH; (70kW)	1781	08.83-04.93		
1.8	2H; (72kW)	1781	08.89-03.93		
1.8	DX; EV; PB; (82kW)	1781	08.82-12.89		
1.8 GTI	DX; JJ; (82kW)	1781	08.82-12.83		
1.5 D; 1.6 D; 1.6 TD	CK; CR; CY; JK; (37kW-51kW)	1471-1588	08.76-07.83	225401	
GOLF II					
1.0	GN; (33kW)	1043	11.83-08.85		
1.0; 1.3	2G; HZ; MH; NU; NZ; (37kW-40kW)	1043-1272	08.85-12.92		
1.3	HK; MH; (40kW)	1272	08.83-06.87		
1.3	GT; (43kW)	1272	08.83-10.86		
1.6	PN; (51kW)	1595	10.86-12.92		
1.6	RF; (53kW)	1595	02.86-10.91		
1.6	ABN; EZ; HM; (55kW)	1595	08.83-07.92		
1.8	RH; (62kW)	1781	08.86-01.90		
1.8	GU; GX; HV; (66kW)	1781	08.84-10.91		
1.8; 1.8 GTI; 1.8i	1P; GU; GX; PF; RD; RP; (66kW-79kW)	1781	08.85-10.91		

RUVILLE YOUR PARTNER

Volkswagen

									1	295405(K)	295405(K):(ST)
									1	295406(K)	295406(K):(GS), (mG)
					8	265430			1	295405(N)	
									1	295404(K)	295404(K):(GS)
									1	295405(K)	295405(K):(ST)
									1	295406(K)	295406(K):(GS), (mG)
					8	265426			1	295405(N)	
									1	295404(K)	295404(K):(GS)
									1	295405(K)	295405(K):(ST)
									1	295406(K)	295406(K):(GS), (mG)
215425					8	265426 [1]			1	295405(N)	215425: G#000001→; 265430: →F#060000; 265426: G#000001→
									1	295404(K)	295404(K):(GS)
									1	295405(K)	295405(K):(ST)
									1	295406(K)	295406(K):(GS), (mG)
					8	265426 [1]			1	295405(N)	265430: →F#060000; 265426: G#000001→
									1	295404(K)	295404(K):(GS)
									1	295405(K)	295405(K):(ST)
									1	295406(K)	295406(K):(GS), (mG)
					8	265426 [1]			1	295405(N)	265430: →15F035000; 265426: 15G000001→
									1	295404(K)	295404(K):(GS)
									1	295405(K)	295405(K):(ST)
									1	295406(K)	295406(K):(GS), (mG)
					8	265426			1	295405(N)	
									1	295404(K)	295404(K):(GS)
									1	295405(K)	295405(K):(ST)
									1	295406(K)	295406(K):(GS), (mG)
					8	265426 [1]			1	295405(N)	265430: DX; EV; 265426: PB
									1	295404(K)	295404(K):(GS)
									1	295405(K)	295405(K):(ST)
									1	295406(K)	295406(K):(GS), (mG)
					8	265430			1	295405(N)	
									1	295404(K)	295404(K):(GS)
									1	295405(K)	295405(K):(ST)
									1	295406(K)	295406(K):(GS), (mG)
215420					8	265430			1	295405(N)	
									1	295404(K)	295404(K):(GS)
									1	295405(K)	295405(K):(ST)
									1	295406(K)	295406(K):(GS), (mG)
									1	295404(K)	295404(K):(GS)
									1	295405(K)	295405(K):(ST)
									1	295406(K)	295406(K):(GS), (mG)
					8	265426			1	295405(N)	
									1	295404(K)	295404(K):(GS)
									1	295405(K)	295405(K):(ST)
									1	295406(K)	295406(K):(GS), (mG)
					8	265426			1	295405(N)	265426: MH
									1	295404(K)	295404(K):(GS)
									1	295405(K)	295405(K):(ST)
									1	295406(K)	295406(K):(GS), (mG)
									1	295405(N)	295405(N):{S}, {CZ}
									1	295404(K)	295404(K):(GS)
									1	295405(K)	295405(K):(ST)
									1	295406(K)	295406(K):(GS), (mG)
215425					8	265426			1	295405(N)	
									1	295404(K)	295404(K):(GS)
									1	295405(K)	295405(K):(ST)
									1	295406(K)	295406(K):(GS), (mG)
215425					8	265426			1	295405(N)	
215425					8	265426			1	295405(N)	295405(N):{S}, {CZ}
									1	295404(K)	295404(K):(GS)
									1	295405(K)	295405(K):(ST)
									1	295406(K)	295406(K):(GS), (mG)
					8	265426			1	295405(N)	
									1	295404(K)	295404(K):(GS)
									1	295405(K)	295405(K):(ST)
									1	295406(K)	295406(K):(GS), (mG)
					8	265426 [1]			1	295405(N)	265430: HV, →12.85; 265426: GU, GX
					8	265426			1	295404(K)	265426: HV, 01.86→; 295404(K):(GS)
									1	295405(K)	295405(K):(ST)
									1	295406(K)	295406(K):(GS), (mG)
					8	265426			1	295405(N)	
									1	295404(K)	295404(K):(GS)

1 siehe Klappseite vorn • see fold in front.

		cm³			
Volkswagen					
GOLF II					
1.8; 1.8 GTI; 1.8i	1P; GU; GX; PF; RD; RP; (66kW-79kW)	1781	08.85-10.91		
1.8 GTI	DX; EV; GZ; PB; (82kW)	1781	08.83-10.91		
1.8 GTI 16V	KR; PL; (95kW-102kW)	1781	02.86-10.91		
1.8 GTI G60	1H; PG; (118kW)	1781	08.88-07.91		
1.8 GTI G60	PG; (118kW)	1781	04.90-07.91		
1.6 D	JP; ME; (40kW)	1588	08.83-10.91		
1.6 TD	JR; MF; (51kW)	1588	08.83-10.91		
1.6 TD	1V; RA; SB; (44kW-59kW)	1588-1589	04.89-10.91		
GOLF III					
1.4	ABD; AEX; (40kW)	1390	11.91-04.99		
1.4	ABD; AEX; APQ; (44kW)	1390	10.91-04.99		
1.6	AEK; AFT; AKS; (74kW)	1595	07.94-04.99		
1.6	ABU; AEA; AEE; (55kW)	1598	09.92-12.97		
1.8	AAM; ANN; (55kW)	1781	11.91-04.99		
1.8	ABS; ACC; ADZ; ANP; (66kW)	1781	11.91-04.99		

RUVILLE YOUR PARTNER

Volkswagen

									1	295405(K)	295405(K):(ST)
									1	295406(K)	295406(K):(GS), (mG)
					8	265426 [1]			1	295405(N)	265430: DX; EV; 265426: PB
									1	295404(K)	295404(K):(GS)
									1	295405(K)	295405(K):(ST)
									1	295406(K)	295406(K):(GS), (mG)
					16	265426			1	295405(N)	
									1	295404(K)	295404(K):(GS)
									1	295405(K)	295405(K):(ST)
									1	295406(K)	295406(K):(GS), (mG)
					8	265426			1	295405(N)	265426: PG; 295405(N): PG
									1	295404(K)	295404(K):(GS)
									1	295405(K)	295405(K):(ST), PG
									1	295406(K)	295406(K):(GS), (mG)
					8	265426			1	295405(N)	265426: PG
									1	295404(K)	295404(K):(GS)
									1	295405(K)	295405(K):(ST)
									1	295406(K)	295406(K):(GS), (mG)
215480					8	265426			1	295405(N)	215480: JP; 265426: JP; 295405(N): JP
									1	295404(K)	265426: ME, {CZ}, {J}; 295405(N): ME, {J}, {CZ}
									1	295405(K)	295404(K):(GS)
									1	295406(K)	295405(K):(ST)
											295406(K):(GS), (mG)
215480					8	265426			1	295405(N)	215480: JR; 265426: JR; 295405(N): JR
									1	295404(K)	265426: MF, {CZ}, {J}; 295405(N): MF, {CZ}, {J}
									1	295405(K)	295404(K):(GS)
									1	295406(K)	295405(K):(ST)
											295406(K):(GS), (mG)
215480					8	265426			1	295405(N)	
									1	295404(K)	295404(K):(GS)
									1	295405(K)	295405(K):(ST)
									1	295406(K)	295406(K):(GS), (mG)
					8	265426			1	295405(N)	265426: ABD
					8	265427			1	295403(K)	265427: AEX; 295403(K):(ST), AEX, 908122→
									1	295404(K)	295403(K):(ST), APQ
									1	295405(K)	295404(K):(GS), ABD
									1	295406(K)	295404(K):(GS), AEX, →908121
											295405(K):(ST), ABD
											295405(K):(ST), AEX, →908121
											295406(K):(GS), ABD, (mG)
											295406(K):(GS), AEX, →908121, (mG)
					8	265426			1	295405(N)	265426: ABD
					8	265427			1	295403(K)	265427: AEX; APQ; 295403(K):(ST), AEX, 908122→
									1	295404(K)	295403(K):(ST), APQ
									1	295405(K)	295404(K):(GS), ABD
									1	295406(K)	295404(K):(GS), AEX, →908121
											295405(K):(ST), ABD
											295405(K):(ST), AEX, →908121
											295406(K):(GS), ABD, (mG)
											295406(K):(GS), AEX, →908121, (mG)
215424					8	265426			1	295404(K)	215424: AFT; AKS; 265426: AEK, →000813;
											295404(K):(GS)
					8	265427			1	295405(K)	265427: AEK, 000814→; 295405(K):(ST)
									1	295406(K)	265427: AFT, AKS; 295406(K):(GS), (mG)
					8	265426			1	295405(N)	265426: ABU
					8	265427			1	295403(K)	265427: AEE; AEA; 295403(K):(ST), AEE, 562758→
									1	295404(K)	295404(K):(GS), AEA, ABU
									1	295405(K)	295404(K):(GS), AEE, →562757
									1	295406(K)	295405(K):(ST), ABU, AEA
											295405(K):(ST), AEE, →562757
											295406(K):(GS), AEA, ABU, (mG)
											295406(K):(GS), AEE, →562757, (mG)
215425					8	265426			1	295405(N)	265426: AAM, →408197
					8	265427			1	295404(K)	265427: AAM, 408198→; 295404(K):(GS)
									1	295405(K)	265427: ANN; 295405(K):(ST)
									1	295406(K)	295406(K):(GS), (mG)
					8	265426			1	295405(N)	265426: ABS, →935645
					8	265427			1	295404(K)	265426: ADZ, →001109; 295404(K):(GS)
									1	295405(K)	265427: ABS, 935646→; 295405(K):(ST)
									1	295406(K)	265427: ACC; 295406(K):(GS), (mG)
											265427: ADZ, 001110→
											265427: ANP

1 siehe Klappseite vorn • see fold in front.

		cm³			
GOLF III					
2.0	AEP; (79kW)	1984	08.95-04.96		
2.0; 2.0 GTI	2E; ADY; AGG; AKR; (85kW)	1984	11.91-04.99		
2.0	AGG; (85kW)	1984	08.95-04.99		
2.0 GTI 16V	ABF; (110kW)	1984	08.92-08.97		
2.8 VR6; 2.9 VR6	AAA; ABV; (128kW-140kW)	2792-2861	01.92-04.99		
1.9 SDI	AEY; (47kW)	1896	07.95-04.99	225404	
1.9 D	1Y; (48kW)	1896	11.91-04.99	225419	
1.9 TD; 1.9 TD,GTD	AAZ; (55kW)	1896	11.91-04.99	225419	
1.9 TDI	1Z; AHU; ALE; (66kW)	1896	09.93-04.99	225403	
1.9 TDI	AFN; (81kW)	1896	04.96-04.99	225403	
GOLF IV					
1.4	AHW; AKQ; APE; AXP; BCA; (55kW)	1390	08.97-06.06		
1.6	AEH; AKL; APF; (74kW)	1595	08.97-02.00		
1.6	AFT; AKS; (74kW)	1595	06.98-06.02		
1.6	AVU; BFQ; BJH; (75kW)	1595	08.00-06.06		
1.6 16V; 1.6 FSI	ATN; AUS; AZD; BAD; BCB; (77kW-81kW)	1598	02.00-06.06		
1.6 FSi	BAG; (85kW)	1598	10.03-07.04		
1.8	AAM; ANN; (55kW)	1781	06.98-06.02		
1.8	ADZ; ANP; (66kW)	1781	06.98-06.02		
1.8	AGN; BAF; (92kW)	1781	08.97-06.06		
1.8 T; 1.8 T GTI	AGU; AQA; ARZ; AUM; AUQ; AWD; (110kW-132kW)	1781	08.97-06.06		
2.0	AGG; AKR; ATU; AWF; AWG; (85kW)	1984	06.98-06.02		
2.0; 2.0 Bi-Fuel	APK; AQY; AZG; AZH; AZJ; BEH; (85kW)	1984	07.98-06.06		

RUVILLE YOUR PARTNER

Volkswagen

					8	265426					265426: →000709
					8	265427					265427: 000710→
215424					8	265426			1	295405(N)	215424: AGG; AKR; 265426: 2E, →565664
					8	265427			1	295404(K)	265426: ADY, →000778; 295404(K):(GS)
									1	295405(K)	265427: 2E, 565665→; 295405(K):(ST)
									1	295406(K)	265427: ADY, 000779→; 295406(K):(GS), (mG)
											265427: AGG, AKR
215424					8	265427			1	295405(N)	215424: AGG; 265427: AGG
									1	295404(K)	295404(K):(GS)
									1	295405(K)	295405(K):(ST)
									1	295406(K)	295406(K):(GS), (mG)
					16	265426			1	295405(N)	
									1	295404(K)	295404(K):(GS)
									1	295405(K)	295405(K):(ST)
									1	295406(K)	295406(K):(GS), (mG)
					12	265426			1	295404(K)	295404(K):(GS)
									1	295406(K)	295406(K):(GS), (mG)
215411					8	265426			1	295405(N)	
									1	295404(K)	295404(K):(GS), AEY, →050000
									1	295405(K)	295405(K):(ST)
									1	295406(K)	295406(K):(GS), AEY, →050000, (mG)
215419					8	265426			1	295405(N)	
									1	295404(K)	295404(K):(GS)
									1	295405(K)	295405(K):(ST)
									1	295406(K)	295406(K):(GS), (mG)
215419					8	265426			1	295405(N)	225419: 1HN000001-1HW500000;
											215419: 1HN000001-1HW500000
									1	295404(K)	295404(K):(GS)
									1	295405(K)	295405(K):(ST)
									1	295406(K)	295406(K):(GS), (mG)
215409					8	265426			1	295405(N)	
									1	295404(K)	295404(K):(GS), 1Z, AHU
									1	295405(K)	295404(K):(GS), ALE, →576000
									1	295406(K)	295405(K):(ST)
											295406(K):(GS), 1Z, AHU, (mG)
											295406(K):(GS), ALE, →576000, (mG)
215409					8	265426			1	295405(N)	
									1	295404(K)	295404(K):(GS), AFN, →576000
									1	295405(K)	295405(K):(ST)
									1	295406(K)	295406(K):(GS), AFN, →576000, (mG)
	16	235410			16	265402			1	295402(N)	295402(N): AHW, AKQ, APE, AXP
	16	235400 [6]									
215424					8	265427			1	295401(N)	
215424					8	265427			1	295404(K)	295404(K):(GS)
									1	295405(K)	295405(K):(ST)
									1	295406(K)	295406(K):(GS), (mG)
	8	235409			8	265165			1	295401(N)	
	8	235402 [6]									
	16	235410			16	265402					
	16	235400 [6]									
	16	235404			16	265402					235404: 5#000001→
	16	235410									235410: →4#200000
	16	235400 [6]									235400: →4#200000
215425					8	265426			1	295405(N)	265426: AAM, →408197; 295405(N): AAM
					8	265427			1	295404(K)	265427: AAM, 408199→; 295404(K):(GS), AAM
									1	295405(K)	265427: ANN; 295405(K):(ST)
									1	295406(K)	295406(K):(GS), AAM, (mG)
					8	265426			1	295405(N)	265426: ADZ, →001109
					8	265427			1	295404(K)	265427: ADZ, 001110→; 295404(K):(GS), ADZ
									1	295405(K)	265427: ANP; 295405(K):(ST)
									1	295406(K)	295406(K):(GS), ADZ, (mG)
					12	265704			1	295401(N)	265704:(ELV)
					8	265705					265705:(ALV)
					12	265704			2	295401(N)	265704:(ELV)
					8	265705					265705:(ALV)
215424					8	265427			1	295401(N)	295401(N): AWF, AWG, ATU
									1	295405(N)	295405(N): AGG, AKR
									1	295401(K)	295401(K):(ST), ATU, AWF, AWG
									1	295404(K)	295404(K):(GS), AGG, AKR
									1	295405(K)	295405(K):(ST), AGG, AKR
									1	295406(K)	295406(K):(GS), AGG, AKR, (mG)
					8	265427			1	295401(N)	

6 siehe Klappseite vorn • see fold in front.

		cm³			
GOLF IV					
2.3 V5	AGZ; (110kW)	2324	08.97-06.06		
2.3 V5	AQN; (125kW)	2324	10.00-06.06		
2.8 V6; 3.2 R32	AQP; AUE; BDE; BFH; BML; (150kW-177kW)	2792-3189	03.99-06.06		
1.9 SDI	AGP; AQM; (50kW)	1896	08.97-06.06		
1.9 TDI	AGR; ALH; (66kW)	1896	10.97-05.06		
1.9 TDI	AHU; ALE; (66kW)	1896	06.98-06.02	225403	
1.9 TDI	ATD; AXR; (74kW)	1896	09.00-06.06		
1.9 TDI	AHF; ASV; (81kW)	1896	08.97-05.04		
1.9 TDI	AFN; AVG; (81kW)	1896	06.98-06.02	225403	
1.9 TDI	AJM; AUY; (85kW)	1896	12.98-06.01		
1.9 TDI	ASZ; (96kW)	1896	11.00-06.06		
1.9 TDI; 1.9 TDi GTi	ARL; (110kW)	1896	02.00-06.06		
GOLF V					
1.4; 1.4 16V	BCA; BUD; (55kW-59kW)	1390	10.03-		
1.4 FSI	BKG; BLN; (66kW)	1390	10.03-		
1.4 FSI; 1.4 TSI	BLG; BMY; CAVD; CAXA; (90kW-125kW)	1390	11.05-		
1.6; 1.6 MultiFuel	BGU; BSE; BSF; CCSA; (75kW)	1595	01.04-		
1.6 FSI	BAG; BLF; BLP; (85kW)	1598	10.03-		
2.0 FSI	AXW; BLR; BLX; BLY; BVX; BVY; BVZ; (110kW)	1984	01.04-		
2.0; 2.0 GTI	AXX; BPY; BWA; CAWB; CBFA; CCTA; (147kW)	1984	10.04-		
2.0 GTI	BYD; (169kW)	1984	09.06-		
3.2; 3.2 R32	BUB; CBR; CBRA; (184kW)	3189	09.05-		
1.9 TDI	BRU; BXF; BXJ; (66kW)	1896	05.04-		
1.9 TDI	BKC; BLS; BXE; (77kW)	1896	10.03-		
1.9 TDI	BLS; (77kW)	1896	01.08-		
2.0 SDI	BDK; (55kW)	1968	01.04-		
2.0 TDI	AZV; CBDA; (100kW)	1968	10.03-		
2.0 TDI	BKD; CBDB; (103kW)	1968	10.03-		
2.0 TDI	BMM; (103kW)	1968	08.04-		
2.0 GTD	BMN; (125kW)	1968	11.05-		
GOLF V PLUS					
1.2 TSI	CBZB; (77kW)	1197	11.09-		
1.4 16V	BCA; BUD; CGGA; (55kW-59kW)	1390	01.05-		
1.4 FSI; 1.4 TSI	BLG; BLN; BMY; CAVD; CAXA; (66kW-125kW)	1390	07.05-		
1.6; 1.6 Multifuel	BSE; BSF; CCSA; CHGA; (75kW)	1595	05.05-		
1.6 FSI	BLF; (85kW)	1598	01.05-		
2.0 FSI	BLR; BLY; BVY; BVZ; (110kW)	1984	05.05-		
1.6 TDI	CAYC; (77kW)	1598	03.09-		
1.9 TDI	BRU; BXF; BXJ; (66kW)	1896	05.05-		
1.9 TDI	BKC; BLS; BXE; (77kW)	1896	01.05-		
2.0 TDI	CBDC; (81kW)	1968	03.09-		
2.0 TDI	AZV; CBDA; (100kW)	1968	05.05-		
2.0 TDI	BKD; CBDB; (103kW)	1968	01.05-		
2.0 TDI	BMM; (103kW)	1968	12.05-		
GOLF VI					
1.2 TSI	CBZB; (77kW)	1197	05.09-		

RUVILLE YOUR PARTNER

Volkswagen

					10	265426					
	20	235701			20	265703					
	24	235701			24	265703					
215403					8	265427			1	295405(N)	
215402					8	265426			1	295405(N)	265426: AGR, →034858
					8	265427					265427: AGR, 034859→
											265427: ALH
215409					8	265426			1	295405(N)	
									1	295404(K)	295404(K):(GS), AHU
									1	295405(K)	295404(K):(GS), ALE, →576000
									1	295406(K)	295405(K):(ST)
											295406(K):(GS), AHU, (mG)
											295406(K):(GS), ALE, →576000, (mG)
215404					8	265403			1	295401(N)	
215402					8	265427			1	295405(N)	215402: AHF
215409					8	265426			1	295405(N)	225403: AFN; 215409: AFN; 265426: AFN
									1	295404(K)	295404(K):(GS), AFN, →576000
									1	295405(K)	295405(K):(ST)
									1	295406(K)	295406(K):(GS), AFN, →576000, (mG)
215404					8	265401			1	295401(N)	
215404					8	265401			1	295401(N)	265401: W#000001-2#700000
					8	265403					265403: 3#000001→
					8	265401					265401: W#000001-2#700000
					8	265403					265403: 3#000001→
	16	235410			16	265402					
	16	235400 [6]									
	16	235404			16	265402					235404: BLN
	16	235410									235410: BKG
	16	235400 [6]									235400: BKG
	16	235404			16	265402					
	8	235409			8	265707			1	295401(N)	
	16	235404			16	265402					235404: BAG, 5#000001→
	16	235410									235404: BLF, BLP
	16	235400 [6]									235410: BAG, →4#200000
											235400: BAG, →4#200000
	16	235408			16	265165					
	16	235408			16	265707					235408: BWA; BPY; AXX
	16	235700									235700: CCTA; CBFA; CAWB
	16	235408			16	265165					
	24	235701			24	265703					
215404					8	265403					
215404					8	265403					215404: BXE; BKC
					8	265403					
215429					8	265403					
215421	16	235406			16	265404					215421: AZV, (ELV); 235406: CBDA; 265404: CBDA
215422											215422: AZV, (ALV)
215421	16	235406			16	265404					215421: BKD, (ELV); 235406: CBDB; 265404: CBDB
215422											215422: BKD, (ALV)
					8	265403					
215421											215421:(ELV)
215423											215423:(ALV)
					8	265402					
	16	235410			16	265402					
	16	235400 [6]									
	16	235404			16	265402					
	8	235409			8	265707					
	16	235404			16	265402					
	16	235408			16	265707					
	16	235406			16	265404					
215404					8	265403					
215404					8	265403					215404: BXE; BKC
	16	235406			16	265404					
215421	16	235406			16	265404					215421: AZV, (ELV); 235406: CBDA; 265404: CBDA
215422											215422: AZV, (ALV)
215421	16	235406			16	265404					215421: BKD, (ELV); 235406: CBDB; 265404: CBDB
215422											215422: BKD, (ALV)
					8	265403					
					8	265402					

6 siehe Klappseite vorn • see fold in front.

		cm³			
GOLF VI					
1.4	CGGA; (59kW)	1390	10.08-		
1.4	BUD; (59kW)	1390	07.09-		
1.4 TSI	CAVD; CAXA; (90kW-118kW)	1390	10.08-		
1.6; 1.6 BiFuel	BSE; BSF; CCSA; CHGA; (75kW)	1595	10.08-		
2.0 TSI	CBFA; CCTA; CCZB; (147kW-155kW)	1984	04.09-		
2.0 R	CDLF; (199kW)	1984	11.09-		
2.5 FSI	CBTA; CBUA; (125kW)	2480	08.09-		
1.6 TDI; 2.0 TDI	CAYB; CAYC; CBAA; CBAB; CBBB; CBDB; CBDC; CFFA; CFFB; CFGB; CJAA; (66kW-125kW)	1598-1968	10.08-		
ILTIS					
1.7 (183)	WL; YX; (55kW)	1714	03.79-12.88		
JETTA I					
1.1; 1.3	FA; GF; GG; (37kW-44kW)	1093-1272	08.78-02.84		
1.5; 1.6	FR; JB; (51kW-63kW)	1457-1588	08.78-02.84		
1.6 GLI; 1.8	DX; EG; JJ; (81kW-82kW)	1588-1781	08.78-02.84		
1.5 D	CK; (37kW)	1471	08.78-07.80	225401	
1.6 D; 1.6 TD	CR; CY; JK; (40kW-51kW)	1588	08.80-02.84	225401	
JETTA II					
1.3	2G; HK; MH; NZ; (40kW)	1272	01.84-12.91		
1.3	GT; (43kW)	1272	01.84-10.86		
1.6	PN; (51kW)	1595	10.86-10.91		
1.6	RF; (53kW)	1595	03.86-10.91		
1.6	ABN; EZ; HM; (55kW)	1595	01.84-07.92		
1.8	RH; (62kW)	1781	08.86-01.90		
1.8	GU; GX; HV; (66kW)	1781	08.84-10.91		
1.8	1P; GX; PF; RD; RP; (66kW-79kW)	1781	08.85-10.91		
1.8	EV; GZ; PB; (82kW)	1781	01.84-10.91		
1.8 16V	PL; (95kW)	1781	08.86-10.91		

RUVILLE YOUR PARTNER

Volkswagen

	16	235410			16	265402					
	16	235400 [6]									
	16	235410			16	265402					
	16	235404			16	265402					
	8	235409			8	265707					
	16	235700			16	265707					
	16	235408			16	265707					
	20	235408			20	265707					
	16	235406			16	265404					
					8	265430			1	295405(N)	
									1	295404(K)	295404(K):(GS)
									1	295405(K)	295405(K):(ST)
									1	295406(K)	295406(K):(GS), (mG)
									1	295405(N)	
									1	295404(K)	295404(K):(GS)
									1	295405(K)	295405(K):(ST)
									1	295406(K)	295406(K):(GS), (mG)
215410					8	265430			1	295405(N)	
									1	295404(K)	295404(K):(GS)
									1	295405(K)	295405(K):(ST)
									1	295406(K)	295406(K):(GS), (mG)
					8	265430			1	295405(N)	
									1	295404(K)	295404(K):(GS)
									1	295405(K)	295405(K):(ST)
									1	295406(K)	295406(K):(GS), (mG)
215420					8	265430			1	295405(N)	
									1	295404(K)	295404(K):(GS)
									1	295406(K)	295406(K):(GS), (mG)
215420					8	265430			1	295405(N)	
									1	295404(K)	295404(K):(GS)
									1	295405(K)	295405(K):(ST)
									1	295406(K)	295406(K):(GS), (mG)
					8	265426			1	295405(N)	265426: MH
									1	295404(K)	295404(K):(GS)
									1	295405(K)	295405(K):(ST)
									1	295406(K)	295406(K):(GS), (mG)
									1	295405(N)	295405(N):{S}, {CZ}
									1	295404(K)	295404(K):(GS)
									1	295405(K)	295405(K):(ST)
									1	295406(K)	295406(K):(GS), (mG)
215425					8	265426			1	295405(N)	
									1	295404(K)	295404(K):(GS)
									1	295405(K)	295405(K):(ST)
									1	295406(K)	295406(K):(GS), (mG)
215425					8	265426			1	295405(N)	
215425					8	265426			1	295405(N)	
									1	295404(K)	295404(K):(GS)
									1	295405(K)	295405(K):(ST)
									1	295406(K)	295406(K):(GS), (mG)
					8	265426			1	295405(N)	
									1	295404(K)	295404(K):(GS)
									1	295405(K)	295405(K):(ST)
									1	295406(K)	295406(K):(GS), (mG)
					8	265426 [1]			1	295405(N)	265430: HV, →12.85; 265426: GU, GX
					8	265426			1	295404(K)	265426: HV, 01.86→; 295404(K):(GS)
									1	295405(K)	295405(K):(ST)
									1	295406(K)	295406(K):(GS), (mG)
					8	265426			1	295405(N)	
									1	295404(K)	295404(K):(GS)
									1	295405(K)	295405(K):(ST)
									1	295406(K)	295406(K):(GS), (mG)
					8	265426 [1]			1	295405(N)	265430: EV; 265426: PB; 295405(N): EV, PB
					8	265430			1	295404(K)	265430: GZ, {S}, {CZ}; 295405(N): GZ, {S}, {CZ}
									1	295405(K)	295404(K):(GS)
									1	295406(K)	295405(K):(ST)
											295406(K):(GS), (mG)
					8	265426			1	295405(N)	
									1	295404(K)	295404(K):(GS)
									1	295405(K)	295405(K):(ST)
									1	295406(K)	295406(K):(GS), (mG)

1, 6 siehe Klappseite vorn • see fold in front.

		cm³			
Volkswagen					
JETTA II					
1.8 16V	KR; (102kW)	1781	06.87-12.89		
1.6 D	JP; ME; (40kW)	1588	01.84-10.91		
1.6 TD	JR; MF; (51kW)	1588	01.84-10.91		
1.6 TD	1V; RA; SB; (44kW-59kW)	1588-1589	04.89-10.91		
JETTA III					
1.4 TSI	BLG; BMY; CAVD; CAXA; (90kW-125kW)	1390	07.06-		
1.6; 1.6 MultiFuel	BSE; BSF; CCSA; (75kW)	1595	10.05-		
1.6 FSI	BLF; (85kW)	1598	09.05-		
2.0 FSI	BLR; BLY; BVY; BVZ; (110kW)	1984	08.05-		
2.0 TFSI	BPY; BWA; CCTA; (147kW)	1984	10.05-		
2.5	BGP; BTK; (110kW)	2480	01.06-		
2.5 FSI	CBTA; CCCA; (125kW)	2480	07.08-		
1.6 TDI	CAYC; (77kW)	1598	06.09-		
1.9 TDI	BKC; BLS; BXE; (77kW)	1896	08.05-		
2.0 TDI	AZV; CBDA; (100kW)	1968	09.05-		
2.0 TDI	CBEA; (103kW)	1968	08.05-		
2.0 TDI	BMM; (103kW)	1968	10.05-		
2.0 TDI	BMN; (125kW)	1968	10.06-		
LT 28-35 I					
2.4	DL; (66kW)	2383	12.82-07.92		
2.4i	1E; (69kW)	2383	08.89-06.96		
2.4 D	1S; ACT; (51kW)	2383	08.89-06.96	225498	
2.4 D	CP; DW; (55kW)	2383	12.78-07.92	225408 225498	
2.4 TD	1G; (68kW)	2383	08.88-08.92	225498	
2.4 D; 2.4 TD	ACL; (70kW)	2383	06.92-06.96		
2.4 TD	DV; (75kW)	2383	12.82-09.93	225408	
2.4 TD	1G; (68kW)	2384	08.88-07.89	225498	
LT 28-35 II					
2.5 SDI	AGX; (55kW)	2461	07.96-07.06	225702	
2.5 TDI	BBE; (61kW)	2461	05.01-07.06		
2.5 TDI	APA; (66kW)	2461	05.99-07.06	225702	
2.5 TDI	BBF; (70kW)	2461	05.01-07.06		
2.5 TDI	AHD; (75kW)	2461	05.96-08.99	225702	
2.5 TDI	ANJ; AVR; (80kW)	2461	05.99-07.06		

RUVILLE YOUR PARTNER

Volkswagen

					16	265426			1	295405(N)	
									1	295404(K)	295404(K):(GS)
									1	295405(K)	295405(K):(ST)
									1	295406(K)	295406(K):(GS), (mG)
215480					8	265426			1	295405(N)	215480: JP; 265426: JP; 295405(N): JP
									1	295404(K)	265426: ME, {J}, {CZ}; 295405(N): ME, {J}, {CZ}
									1	295405(K)	295404(K):(GS)
									1	295406(K)	295405(K):(ST)
											295406(K):(GS), (mG)
215480					8	265426			1	295405(N)	215480: JR; 265426: JR; 295405(N): JR
									1	295404(K)	265426: MF, {CZ}, {J}; 295405(N): MF, {CZ}, {J}
									1	295405(K)	295404(K):(GS)
									1	295406(K)	295405(K):(ST)
											295406(K):(GS), (mG)
215480					8	265426			1	295405(N)	
									1	295404(K)	295404(K):(GS)
									1	295405(K)	295405(K):(ST)
									1	295406(K)	295406(K):(GS), (mG)
	16	235404			16	265402					
	8	235409			8	265707					
	16	235404			16	265402					
	16	235408			16	265165					265165: →7#161384
					16	265707					265707: 7#161385→
	16	235408			16	265707					235408: BWA; BPY
	16	235700									235700: CCTA
	20	235408			20	265165					265165: →7#161384
					20	265707					265707: 7#161385→
	20	235408			20	265707					
	16	235406			16	265404					235406: CAYC; 265404: CAYC
215404					16	265403					215404: BXE; BKC
215421	16	235406			16	265404					215421: AZV, (ELV); 235406: CBDA; 265404: CBDA
215422											215422: AZV, (ALV)
215421											215421:(ELV)
215422											215422:(ALV)
					8	265403					
215421											215421:(ELV)
215423											215423:(ALV)
					12	265430			1	295404(K)	295404(K):(GS)
									1	295406(K)	295406(K):(GS), (mG)
					12	265426			1	295405(N)	
									1	295404(K)	295404(K):(GS)
									1	295406(K)	295406(K):(GS), (mG)
215498					12	265426			1	295405(N)	225498: 1S; 215498: 1S; 295405(N): 1S
									1	295404(K)	295404(K):(GS)
									1	295406(K)	295406(K):(GS), (mG)
215498					12	265426 [1]			1	295405(N)	225408:→12.89, DW; 215498:01.90→, DW; 265430: CP; 265426: DW, 01.90→
215499					12	265430			1	295404(K)	225498:01.90→, DW; 215499:→12.89, DW; 265430: DW, →12.89; 295404(K):(GS)
									1	295406(K)	295406(K):(GS), (mG)
215498					12	265426			1	295405(N)	
									1	295404(K)	295404(K):(GS)
									1	295406(K)	295406(K):(GS), (mG)
					12	265426			1	295404(K)	295404(K):(GS)
									1	295406(K)	295406(K):(GS), (mG)
215499					12	265430			1	295405(N)	
									1	295404(K)	295404(K):(GS)
									1	295406(K)	295406(K):(GS), (mG)
215498					12	265426					
215702					10	265426			1	295404(K)	295404(K):(GS), AGX, →009000
									1	295406(K)	295406(K):(GS), AGX, →009000, (mG)
					8	265426					
215702					10	265426					
					8	265426					
215702					10	265426			1	295404(K)	295404(K):(GS), AHD, →036065
									1	295406(K)	295406(K):(GS), AHD, →036065, (mG)
215702					10	265426					

1 siehe Klappseite vorn • see fold in front.

RUVILLE YOUR PARTNER

		cm³			
LT 28-46 II					
2.5 SDI	AGX; (55kW)	2461	09.96-07.06	225702	
2.5 TDI	BBE; (61kW)	2461	05.01-07.06		
2.5 TDI	APA; (66kW)	2461	05.99-07.06	225702	
2.5 TDI	BBF; (70kW)	2461	05.01-07.06		
2.5 TDI	AHD; (75kW)	2461	05.96-08.99	225702	
2.5 TDI	ANJ; AVR; (80kW)	2461	05.99-07.06	225702	
LT 40-55 I					
2.4	DL; (66kW)	2383	12.82-07.92		
2.4i	1E; (69kW)	2383	01.93-06.96		
2.4 D	1S; ACT; (51kW)	2383	07.90-06.96	225498	
2.4 D	CP; DW; (55kW)	2383	12.78-07.92	225408 225498	
2.4 D	DW; (55kW)	2383	01.79-03.86	225408	
2.4 TD	1G; (68kW)	2383	08.88-08.92	225498	
2.4 TD	ACL; (70kW)	2383	06.92-06.96		
2.4 TD	DV; (75kW)	2383	08.78-09.93	225408	
LUPO					
1.0	AER; ALD; ALL; ANV; AUC; (37kW)	999	09.98-07.05		
1.4	AUD; (44kW)	1390	10.00-07.05		
1.4 16V	AHW; AKQ; APE; AUA; BBY; (55kW)	1390	09.98-07.05		
1.4 16V	AFK; ANM; AQQ; AUB; (74kW)	1390	08.99-07.05		
1.4 FSI; 1.6 GTI	ARR; AVY; (77kW-92kW)	1390-1598	09.00-07.05		
1.2 TDI	ANY; AYZ; (45kW)	1191	07.99-07.05		
1.4 TDI	AMF; (55kW)	1422	01.99-07.05		
1.7 SDI	AKU; (44kW)	1716	09.98-07.05	225404	
MULTIVAN T5					
2.0	AXA; (85kW)	1984	11.03-		
3.2 V6; 3.2 VR6	BDL; BKK; CFLA; (170kW-173kW)	3189	02.04-		
1.9 TDI	BRR; BRS; (62kW-75kW)	1896	01.06-		
1.9 TDI	AXB; (77kW)	1896	04.03-		
2.0 BiTDI; 2.0 TDI	CAAA; CAAB; CAAC; CFCA; (62kW-132kW)	1968	09.09-		
2.5 TDI	AXD; BNZ; (96kW)	2461	04.03-		
2.5 TDI	BLJ; (120kW)	2461	11.03-		
2.5 TDI	AXE; BPC; (128kW)	2461	04.03-		
NEW BEETLE					
1.4	BCA; (55kW)	1390	11.01-		
1.6	AWH; (74kW)	1595	10.99-09.00		

RUVILLE YOUR PARTNER

Volkswagen

215702					10	265426			1	295404(K)	295404(K):(GS), AGX, →009000
									1	295406(K)	295406(K):(GS), AGX, →009000, (mG)
					8	265426					
215702					10	265426					
					8	265426					
215702					10	265426			1	295404(K)	295404(K):(GS), AHD, →036065
									1	295406(K)	295406(K):(GS), AHD, →036065, (mG)
					10	265426					
					12	265430			1	295404(K)	295404(K):(GS)
									1	295406(K)	295406(K):(GS), (mG)
					12	265426			1	295405(N)	
									1	295404(K)	295404(K):(GS)
									1	295406(K)	295406(K):(GS), (mG)
215498					12	265426			1	295405(N)	225498: 1S; 215498: 1S; 295405(N): 1S
									1	295404(K)	295404(K):(GS)
									1	295406(K)	295406(K):(GS), (mG)
215498					12	265426 [1]			1	295405(N)	225408:→12.89, DW; 215498:01.90→, DW; 265430: CP; 265426: DW, 01.90→
215499					12	265430			1	295404(K)	225498:01.90→, DW; 215499:→12.89, DW; 265430: DW, →12.89; 295404(K):(GS)
									1	295406(K)	295406(K):(GS), (mG)
215499					12	265430			1	295405(N)	
									1	295404(K)	295404(K):(GS)
									1	295406(K)	295406(K):(GS), (mG)
215498					12	265426			1	295405(N)	
									1	295404(K)	295404(K):(GS)
									1	295406(K)	295406(K):(GS), (mG)
					12	265426			1	295404(K)	295404(K):(GS)
									1	295406(K)	295406(K):(GS), (mG)
215499					12	265430			1	295405(N)	
									1	295404(K)	295404(K):(GS)
									1	295406(K)	295406(K):(GS), (mG)
	8	235455			8	265402			1	295403(N)	235455: ALD, ANV, AUC; 265402: ALD, ANV, AUC; 295403(N): ALD, ANV, AUC
	8	235453 [6]			8	265427			1	295405(N)	235453: ALD, ANV, AUC; 265427: AER, ALL; 295405(N): AER, ALL
									1	295403(K)	295403(K):(ST), AER, 220084→
									1	295404(K)	295403(K):(ST), ALL, ALD, ANV, AUC
									1	295405(K)	295404(K):(GS), AER, →220083
									1	295406(K)	295405(K):(ST), AER, →220083
											295406(K):(GS), AER, →220083, (mG)
	8	235455			8	265402			1	295403(N)	
	8	235453 [6]							1	295403(K)	295403(K):(ST)
	16	235410			16	265402			1	295402(N)	295402(N): AHW, AKQ, APE, AUA
	16	235400 [6]									
	16	235410			16	265402			1	295402(N)	295402(N): AFK, AQQ, AUB
	16	235400 [6]									
	16	235410			16	265402					
	16	235400 [6]									
					6	265403			1	295401(N)	295401(N): ANY
215406					6	265403			1	295401(N)	
									1	295404(K)	295404(K):(GS)
									1	295406(K)	295406(K):(GS), (mG)
215411					8	265426			1	295405(N)	
									1	295405(K)	295405(K):(ST)
					8	265427					
	24	235701			24	265703					
					8	265403					
215404					8	265401					
	16	235406			16	265404					
215405					10	265403					215405: AXD
215431											215431: BNZ
					10	265403					
215405					10	265403					215405: AXE
215431											215431: BPC
	16	235410			16	265402					
	16	235400 [6]									
215424					8	265427					

1, 6 siehe Klappseite vorn • see fold in front.

RUVILLE
YOUR PARTNER

		cm³			

Volkswagen

NEW BEETLE					
1.6	AYD; BFS; (75kW)	1595	06.00-		
1.8 T	AGU; APH; AVC; AWP; AWU; AWV; BKF; BNU; (110kW-132kW)	1781	10.99-		
2.0	AEG; APK; AQY; AVH; AZG; AZJ; BEJ; BER; BEV; BHP; CBPA; (85kW)	1984	01.98-		
2.0	AZJ; BDC; BEV; BGD; (85kW)	1984	09.02-		
2.3 V5	AQN; (125kW)	2324	10.00-		
2.5 TURBO	BPR; BPS; (110kW)	2480	07.05-		
RSI 3.2	AXJ; (165kW)	3188	04.00-05.01		
1.9 TDI	ALH; (66kW)	1896	01.98-06.04		
1.9 TDI	ATD; BEW; (74kW)	1896	02.01-		
1.9 TDI	AXR; BSW; (74kW-77kW)	1896	06.03-		
PASSAT (32/33)					
1.3	FY; (40kW)	1272	05.73-07.80		
1.3	ZF; (44kW)	1281	05.73-01.78		
1.5	YJ; ZB; (55kW)	1471	07.73-12.75		
1.5	ZC; (63kW)	1471	05.73-12.75		
1.6	FS; (53kW)	1588	08.75-07.80		
1.6	YN; YP; (55kW-63kW)	1588	08.75-07.80		
1.6i	YS; (81kW)	1588	06.78-07.80		
1.5 D; 1.6 D	CK; CR; (37kW-40kW)	1471-1588	02.77-07.80	225401	
PASSAT (32B)					
1.3	FY; FZ; (40kW-44kW)	1272	08.80-07.86		
1.6	PP; (51kW)	1588	08.87-03.88		
1.6	WV; YN; (55kW)	1588	08.80-03.88		
1.6	YP; (63kW)	1588	01.81-02.83		
1.6	RL; (53kW)	1595	01.85-03.88		
1.6	DT; (55kW)	1595	08.80-03.88		
1.8	RM; (64kW)	1781	05.86-03.88		
1.8	DS; JN; JV; (66kW)	1781	01.83-03.88		

RUVILLE YOUR PARTNER

Volkswagen

	8	235409			8	265165			1	295401(N)	
	8	235402 [6]									
					12	265704					265704:(ELV)
					8	265705					265705:(ALV)
215424					8	265427			1	295401(N)	215424: AEG; 295401(N): APK, AQY, AZG
					8	265427					
	20	235701			20	265703					
	20	235408			20	265707					
	24	235701			24	265703					
215402					8	265427			1	295405(N)	
215404					8	265401			1	295401(N)	
215404					8	265403					
									1	295405(N)	
									1	295404(K)	295404(K):(GS)
									1	295405(K)	295405(K):(ST)
									1	295406(K)	295406(K):(GS), (mG)
					8	265430			1	295405(N)	
									1	295404(K)	295404(K):(GS)
									1	295405(K)	295405(K):(ST)
									1	295406(K)	295406(K):(GS), (mG)
					8	265430			1	295405(N)	295405(N): YJ, ZB, →ZB0203000, YJ0000001→
									1	295404(K)	295404(K):(GS), YJ, ZB, →ZB0203000, YJ0000001→
									1	295405(K)	295405(K):(ST), YJ, ZB, →ZB0203000, YJ0000001→
									1	295406(K)	295406(K):(GS), YJ, ZB, →ZB0203000, YJ0000001→, (mG)
					8	265430			1	295405(N)	
									1	295404(K)	295404(K):(GS)
									1	295405(K)	295405(K):(ST)
									1	295406(K)	295406(K):(GS), (mG)
					8	265430					
215410					8	265430			1	295405(N)	
									1	295404(K)	295404(K):(GS)
									1	295405(K)	295405(K):(ST)
									1	295406(K)	295406(K):(GS), (mG)
					8	265430			1	295405(N)	
									1	295404(K)	295404(K):(GS)
									1	295405(K)	295405(K):(ST)
									1	295406(K)	295406(K):(GS), (mG)
215420					8	265430			1	295405(N)	
									1	295404(K)	295404(K):(GS)
									1	295405(K)	295405(K):(ST)
									1	295406(K)	295406(K):(GS), (mG)
									1	295405(N)	
									1	295404(K)	295404(K):(GS)
									1	295405(K)	295405(K):(ST)
									1	295406(K)	295406(K):(GS), (mG)
					8	265426			1	295405(N)	
									1	295404(K)	295404(K):(GS)
									1	295405(K)	295405(K):(ST)
									1	295406(K)	295406(K):(GS), (mG)
215410					8	265430			1	295405(N)	215410: WV, YN
									1	295404(K)	215410: YN, WV; 295404(K):(GS)
									1	295405(K)	295405(K):(ST)
									1	295406(K)	295406(K):(GS), (mG)
215410					8	265430			1	295405(N)	
									1	295404(K)	295404(K):(GS)
									1	295405(K)	295405(K):(ST)
									1	295406(K)	295406(K):(GS), (mG)
215425					8	265426			1	295405(N)	
									1	295404(K)	295404(K):(GS)
									1	295405(K)	295405(K):(ST)
									1	295406(K)	295406(K):(GS), (mG)
215425					8	265426 [1]			1	295405(N)	265430:→12.85; 265426:01.86→
									1	295404(K)	295404(K):(GS)
									1	295405(K)	295405(K):(ST)
									1	295406(K)	295406(K):(GS), (mG)
					8	265426			1	295405(N)	
									1	295404(K)	295404(K):(GS)
									1	295405(K)	295405(K):(ST)
									1	295406(K)	295406(K):(GS), (mG)
					8	265426 [1]			1	295405(N)	265430: DS, →12.85; 265426: DS, 01.86→
					8	265426			1	295404(K)	265426: JN; 295404(K):(GS)

1, 6 siehe Klappseite vorn • see fold in front.

		cm³			
Volkswagen					
PASSAT (32B)					
1.8	DS; JN; JV; (66kW)	1781	01.83-03.88		
1.8	DS; JN; (66kW)	1781	01.86-03.88		
1.8	DZ; (82kW)	1781	12.83-03.88		
1.9	WN; (85kW)	1921	01.81-07.83		
2.0	HP; JS; (85kW)	1994	08.83-03.88		
2.1	WE; (85kW)	2144	01.81-07.83		
2.2	KX; (85kW)	2226	01.85-03.88		
2.2	JT; (88kW)	2226	08.85-03.88		
2.2	KV; (100kW)	2226	01.85-03.88		
1.6 D	CR; JK; (40kW)	1588	08.80-03.88	225401	
1.6 TD	CY; (51kW)	1588	04.82-03.88	225401	
1.6 TD	RA; (59kW)	1588	05.86-03.88		
PASSAT (3A_, 35I)					
1.6	1F; EZ; (53kW-55kW)	1595	02.88-09.91		
1.6	AEK; AFT; (74kW)	1595	07.94-08.96		
1.8	AAM; (55kW)	1781	08.90-05.97		
1.8	ABS; ADZ; RP; (66kW)	1781	02.88-05.97		
1.8	PF; (79kW)	1781	04.88-07.93		
1.8	PB; (82kW)	1781	04.88-07.92		
1.8 16V	KR; (100kW)	1781	04.88-12.89		
1.8 G60	PG; (118kW)	1781	08.88-05.97		
2.0	AEP; (79kW)	1984	03.95-08.96		
2.0	2E; ADY; AGG; (85kW)	1984	02.90-05.97		

RUVILLE YOUR PARTNER

Volkswagen

									1	295405(K)	295405(K):(ST)
									1	295406(K)	295406(K):(GS), (mG)
					8	265426			1	295405(N)	
									1	295404(K)	295404(K):(GS)
									1	295405(K)	295405(K):(ST)
									1	295406(K)	295406(K):(GS), (mG)
					8	265430			1	295405(N)	
									1	295404(K)	295404(K):(GS)
									1	295405(K)	295405(K):(ST)
									1	295406(K)	295406(K):(GS), (mG)
					8	265430			1	295405(N)	
									1	295404(K)	295404(K):(GS)
									1	295406(K)	295406(K):(GS), (mG)
					10	265426			1	295405(N)	
									1	295404(K)	295404(K):(GS)
									1	295406(K)	295406(K):(GS), (mG)
					8	265430			1	295405(N)	265430:{S}, {CZ}; 295405(N):{S}, {CZ}
									1	295404(K)	295404(K):(GS)
									1	295406(K)	295406(K):(GS), (mG)
					10	265426			1	295404(K)	295404(K):(GS)
									1	295406(K)	295406(K):(GS), (mG)
					8	265426			1	295405(N)	
									1	295404(K)	295404(K):(GS)
									1	295406(K)	295406(K):(GS), (mG)
					10	265426			1	295404(K)	295404(K):(GS)
									1	295406(K)	295406(K):(GS), (mG)
215420					8	265426 [1]			1	295405(N)	265430: CR; 265426: JK, 01.86→
					8	265430			1	295404(K)	265430: JK, →12.85; 295404(K):(GS)
									1	295405(K)	295405(K):(ST)
									1	295406(K)	295406(K):(GS), (mG)
215420					8	265430			1	295405(N)	
									1	295404(K)	295404(K):(GS)
									1	295405(K)	295405(K):(ST)
									1	295406(K)	295406(K):(GS), (mG)
215480					8	265426			1	295405(N)	
									1	295404(K)	295404(K):(GS)
									1	295405(K)	295405(K):(ST)
									1	295406(K)	295406(K):(GS), (mG)
215425					8	265426			1	295405(N)	
									1	295404(K)	295404(K):(GS)
									1	295405(K)	295405(K):(ST)
									1	295406(K)	295406(K):(GS), (mG)
215424					8	265426			1	295404(K)	215424: AFT; 265426: AEK, →000813; 295404(K):(GS)
					8	265427			1	295405(K)	265427: AEK, 000814→; 295405(K):(ST)
									1	295406(K)	265427: AFT; 295406(K):(GS), (mG)
215425					8	265426			1	295405(N)	265426: →408197
					8	265427			1	295404(K)	265427: 408198→; 295404(K):(GS)
									1	295405(K)	295405(K):(ST)
									1	295406(K)	295406(K):(GS), (mG)
					8	265426			1	295405(N)	265426: ABS, →935645
					8	265427			1	295404(K)	265426: ADZ, →011565; 295404(K):(GS)
									1	295405(K)	265426: RP; 295405(K):(ST)
									1	295406(K)	265427: ABS, 935646→; 295406(K):(GS), (mG)
											265427: ADZ, 011566→
					8	265426			1	295405(N)	
									1	295404(K)	295404(K):(GS)
									1	295405(K)	295405(K):(ST)
									1	295406(K)	295406(K):(GS), (mG)
					8	265426			1	295405(N)	
									1	295404(K)	295404(K):(GS)
									1	295406(K)	295406(K):(GS), (mG)
					16	265426			1	295405(N)	
									1	295404(K)	295404(K):(GS)
									1	295405(K)	295405(K):(ST)
									1	295406(K)	295406(K):(GS), (mG)
					8	265426			1	295405(N)	
									1	295404(K)	295404(K):(GS)
									1	295405(K)	295405(K):(ST)
									1	295406(K)	295406(K):(GS), (mG)
					8	265426			1	295404(K)	265426: →000709; 295404(K):(GS)
					8	265427			1	295405(K)	265427: 000710→; 295405(K):(ST)
									1	295406(K)	295406(K):(GS), (mG)
215424					8	265426			1	295405(N)	215424: AGG; 265426: 2E, →565664

1 siehe Klappseite vorn • see fold in front.

		cm³			
Volkswagen					
PASSAT (3A_, 35I)					
2.0	2E; ADY; AGG; (85kW)	1984	02.90-05.97		
2.0 16V; 2.0 16V GT	9A; ABF; (100kW-110kW)	1984	08.88-05.97		
2.8 VR6; 2.9 VR6	AAA; ABV; (128kW-135kW)	2792-2861	06.91-05.97		
1.6 TD	RA; SB; (59kW)	1588	08.88-09.93		
1.9 D	1Y; (50kW)	1896	05.89-10.93	225419	
1.9 TD	AAZ; (55kW)	1896	03.91-05.97	225419	
1.9 TDI	1Z; AHU; (66kW)	1896	10.93-05.97	225403	
1.9 TDI	AFN; (81kW)	1896	03.96-05.97	225403	
PASSAT (3B2,3B5)					
1.6	ADP; AHL; ANA; ARM; (74kW)	1595	10.96-11.00		
1.8	AFY; (85kW)	1781	01.97-11.00		
1.8; 1.8 20V	ADR; APT; ARG; (92kW)	1781	10.96-11.00		
1.8 T 20V	AEB; ANB; APU; (110kW)	1781	10.96-11.00		
2.3 VR5	AGZ; (110kW)	2324	10.96-11.00		
2.8; 2.8 30V; 2.8 V6	ACK; AGE; ALG; APR; AQD; ATX; BBG; (132kW-142kW)	2771	08.96-11.00		
1.9 TDI	AHH; AHU; (66kW)	1896	10.96-11.00	225403	
1.9 TDI	AVB; (74kW)	1896	02.00-11.00		
1.9 TDI	AFN; AVG; (81kW)	1896	10.96-11.00	225403	
1.9 TDI	AJM; ATJ; (85kW)	1896	08.98-11.00		
2.5 TDI	AFB; AKN; (110kW)	2496	07.98-11.00	225411	
PASSAT (3B3,3B6)					
1.6	ALZ; (75kW)	1595	11.00-05.05		
1.8 T 20V	AWL; AWT; (110kW)	1781	11.00-05.05		

RUVILLE YOUR PARTNER

Volkswagen

					8	265427			1	295404(K)	265426: ADY, →000778; 295404(K):(GS)
									1	295405(K)	265427: 2E, 565665→; 295405(K):(ST)
									1	295406(K)	265427: ADY, 000779→; 295406(K):(GS), (mG)
											265427: AGG
					16	265426			1	295405(N)	
									1	295404(K)	295404(K):(GS)
									1	295405(K)	295405(K):(ST)
									1	295406(K)	295406(K):(GS), (mG)
					12	265426			1	295404(K)	295404(K):(GS)
									1	295406(K)	295406(K):(GS), (mG)
215480					8	265426			1	295405(N)	
									1	295404(K)	295404(K):(GS)
									1	295405(K)	295405(K):(ST)
									1	295406(K)	295406(K):(GS), (mG)
215419					8	265426			1	295405(N)	
									1	295404(K)	295404(K):(GS)
									1	295405(K)	295405(K):(ST)
									1	295406(K)	295406(K):(GS), (mG)
215419					8	265426			1	295405(N)	225419: 1HN000001-1HW500000;
											215419: 1HN000001-1HW500000
									1	295404(K)	295404(K):(GS)
									1	295405(K)	295405(K):(ST)
									1	295406(K)	295406(K):(GS), (mG)
215409					8	265426			1	295405(N)	
									1	295404(K)	295404(K):(GS)
									1	295405(K)	295405(K):(ST)
									1	295406(K)	295406(K):(GS), (mG)
215409					8	265426			1	295405(N)	
									1	295404(K)	295404(K):(GS), AFN, →576000
									1	295405(K)	295405(K):(ST)
									1	295406(K)	295406(K):(GS), AFN, →576000, (mG)
					8	265427			1	295401(N)	
									1	295404(K)	295404(K):(GS), ADP
									1	295406(K)	295406(K):(GS), ADP, (mG)
					12	265704			1	295405(N)	265704:(ELV)
					8	265705			1	295404(K)	265705:(ALV); 295404(K):(GS)
									1	295405(K)	295405(K):(ST)
									1	295406(K)	295406(K):(GS), (mG)
					12	265704			2	295401(N)	265704:(ELV); 295401(N): APT, ARG, AVV
					8	265705			1	295405(N)	265705:(ALV); 295405(N): ADR
									1	295401(K)	295401(K):(ST), APT, ARG, AVV
									1	295404(K)	295404(K):(GS), ADR
									1	295405(K)	295405(K):(ST), ADR
									1	295406(K)	295406(K):(GS), ADR, (mG)
					12	265704			2	295401(N)	265704:(ELV); 295401(N): ANB, APU
					8	265705			1	295405(N)	265705:(ALV); 295405(N): AEB
									1	295401(K)	295401(K):(ST), ANB, APU
									1	295404(K)	295404(K):(GS), AEB, ARK
									1	295405(K)	295405(K):(ST), AEB
									1	295406(K)	295406(K):(GS), AEB, ARK, (mG)
					10	265426					
					18	265704			4	295405(N)	265704:(ELV)
					12	265705					265705:(ALV)
215409					8	265426			1	295405(N)	
									1	295404(K)	295404(K):(GS), AHU
									1	295405(K)	295405(K):(ST)
									1	295406(K)	295406(K):(GS), AHU, (mG)
215404					8	265403					
215409					8	265426			1	295405(N)	225403: AFN; 215409: AFN; 265426: AFN
									1	295404(K)	295404(K):(GS), AFN, →576000
									1	295405(K)	295405(K):(ST)
									1	295406(K)	295406(K):(GS), AFN, →576000, (mG)
215404					8	265401			1	295401(N)	
215407	24	235405			24	265702			2	295405(N)	215407:(ELV), (Zyl.:1-3)
215408											215408:(ELV), (Zyl.:4-6)
215413											215413:(ALV), (Zyl.:1-3)
215418											215418:(ALV), (Zyl.:4-6)
	8	235409			8	265165			1	295401(N)	
	8	235402 [6]									
					12	265704			2	295401(N)	265704:(ELV)
					8	265705					265705:(ALV)

6 siehe Klappseite vorn • see fold in front.

		cm³			
Volkswagen					
PASSAT (3B3,3B6)					
1.8; 1.8 T	AWM; (125kW)	1781	02.01-05.05		
2.0	AZM; BFF; (85kW)	1984	11.00-05.05		
2.0	ALT; (96kW)	1984	11.01-05.05		
2.3 V5; 2.3 VR5	AZX; (125kW)	2324	11.00-05.05		
2.8	AMX; ATQ; (142kW)	2771	11.00-05.05		
4.0 W8	BDN; BDP; (202kW)	3999	09.01-05.05		
1.9 TDI	AVB; AVF; AWX; (74kW-96kW)	1896	11.00-05.05		
2.0 TDI	BGW; BHW; (100kW)	1968	12.03-05.05		
2.5 TDI	AFB; AKN; (110kW)	2496	11.00-05.05	225411	
2.5 TDI	BAU; BDG; BDH; (120kW-132kW)	2496	01.03-05.05		
PASSAT (3C2,3C5)					
1.4 TSI; 1.4 TSI EcoFuel	CAXA; CDGA; (90kW-110kW)	1390	05.07-		
1.6	BSE; BSF; (75kW)	1595	05.05-		
1.6 FSI	BLF; (85kW)	1598	03.05-		
1.8 TSI	BZB; CDAA; CDAB; CGYA; (112kW-118kW)	1798	05.07-		
2.0 FSI	BLR; BLX; BLY; BVX; BVY; BVZ; (110kW)	1984	03.05-		
2.0 TFSI	AXX; BPY; BWA; CAWB; CBFA; CCTA; CCZA; (147kW)	1984	07.05-		
3.2 FSI; 3.6 FSi; 3.6 R36	AXZ; BLV; BWS; (184kW-220kW)	3168-3597	06.05-		
1.6 TDI	CAYC; (77kW)	1598	08.09-		
1.9 TDI	BKC; BLS; BXE; (77kW)	1896	03.05-		
2.0 TDI	CBDC; (81kW)	1968	11.08-		
2.0 TDI	BMA; CBAA; (100kW)	1968	03.05-		
2.0 TDI	BKP; CBAB; (103kW)	1968	03.05-		
2.0 TDI	BMP; (103kW)	1968	03.05-		
2.0 BlueTDI	CBAC; (105kW)	1968	01.09-		
2.0 TDI	BMR; CBBB; (125kW)	1968	08.05-		
PASSAT CC					
1.8 TSI; 2.0 TSI	BZB; CAWB; CBFA; CCTA; CCZA; CDAA; (118kW-147kW)	1798-1984	06.08-		
3.6	BWS; (220kW)	3597	06.08-		
2.0 BlueTDI; 2.0 TDI	CBAA; CBAB; CBAC; CBBB; (100kW-125kW)	1968	06.08-		
PHAETON (3D2)					
3.2 V6; 3.6 V6	AYT; BKL; BRK; CHNA; (177kW-206kW)	3189-3597	04.02-		
4.2 V8	BGH; BGJ; (246kW)	4172	05.03-		
6.0 W12	BAN; (309kW)	5998	04.02-		
6.0 W12	BRN; BTT; (331kW)	5998	05.05-		
3.0 V6 TDI	BMK; CARA; CARB; CEXA; (165kW-176kW)	2967	09.04-		
5.0 V10 TDI	AJS; (230kW)	4921	11.02-		
POLO (6KV2)					
1.4 60	AEX; AKK; AKV; ANW; APQ; AUD; (44kW)	1390	12.95-09.01		
1.4 16V 75	APE; AUA; (55kW)	1390	10.99-09.01		
1.6 75	1F; (55kW)	1595	11.95-09.97		
1.6 100	AEH; AFT; AKL; APF; AUR; (74kW)	1595	12.95-09.01		
1.6 75	AEE; ALM; (55kW)	1598	11.95-09.01		

RUVILLE YOUR PARTNER

Volkswagen

					12	265704					265704:(ELV)
					8	265705					265705:(ALV)
					8	265427					
					12	265704					265704:(ELV)
					8	265705					265705:(ALV)
	20	235701			20	265703					
					18	265704			4	295405(N)	265704:(ELV)
					12	265705					265705:(ALV)
	32	235701			32	265716					
215404					8	265403					
215701					8	265403					
215407	24	235405			24	265702			2	295405(N)	215407:(ELV), (Zyl.:1-3)
215408											215408:(ELV), (Zyl.:4-6)
215413											215413:(ALV), (Zyl.:1-3)
215418											215418:(ALV), (Zyl.:4-6)
	24	235406			24	265404					
	16	235404			16	265402					
	8	235409			8	265165					
	8	235402 [6]									
	16	235404			16	265402					
	16	235700			16	265707					
	16	235408			16	265165					
	16	235408			16	265707					235408: BPY; AXX; BWA
	16	235700									235700: CCTA; CBFA; CAWB
	24	235701			24	265703					
	16	235406			16	265404					
215404					8	265403					215404: BXE; BKC
	16	235406			16	265404					
215421	16	235406			16	265404					215421: BMA, (ELV); 235406: CBAA; 265404: CBAA
215422											215422: BMA, (ALV)
215421	16	235406			16	265404					215421: BKP, (ELV); 235406: CBAB; 265404: CBAB
215422											215422: BKP, (ALV)
					8	265403					
	16	235406			16	265404					
215421	16	235406			16	265404					215421: BMR, (ELV); 235406: CBBB; 265404: CBBB
215423											215423: BMR, (ALV)
	16	235700			16	265707					
	24	235701			24	265703					
	16	235406			16	265404					
	24	235701			24	265703					
	8	245404 [6]									245404:(ELV), BGH
	8	245405 [6]									245405:(ALV), BGH
	48	235701			48	265716					
	48	235701			48	265703					
	24	235406			24	265404					
					20	265403					
					8	265402			1	295403(N)	265402: AKK, ANW, AUD; 295403(N): AUD, ANW, AKK
					8	265427			1	295405(N)	265427: AEX, AKV, ANX, APQ; 295405(N): AEX, AKV, APQ, ANX
									1	295404(K)	295404(K):(GS), AEX, AKV, →AEX908121, →AKV095008
									1	295406(K)	295406(K):(GS), AEX, AKV, →AEX908121, →AKV095008, (mG)
	16	235410			16	265402			1	295402(N)	
	16	235400 [6]									
215425					8	265427					
215424					8	265427			1	295401(N)	295401(N): AEH, AKL, APF, AUR
									1	295405(N)	295405(N): AFT
									1	295404(K)	295404(K):(GS), AFT
									1	295405(K)	295405(K):(ST), AFT
									1	295406(K)	295406(K):(GS), AFT, (mG)
					8	265427			1	295405(N)	
									1	295403(K)	295403(K):(ST), AEE, ALM, AEE562758→, ALM000707→
									1	295404(K)	295404(K):(GS), 1F
									1	295405(K)	295404(K):(GS), AEE, →562757
									1	295406(K)	295405(K):(ST), 1F
											295405(K):(ST), AEE, ALM, →AEE562757, →ALM000706
											295406(K):(GS), 1F, (mG)
											295406(K):(GS), AEE, →562757, (mG)

6 siehe Klappseite vorn • see fold in front.

		cm³			
POLO (6KV2)					
1.8 90	ADD; (66kW)	1781	01.97-09.01		
2.0	ADC; (85kW)	1984	08.99-09.01		
1.7 SDI 57	AKW; (42kW)	1716	07.97-09.01	225404	
1.9 SDI 64	AEY; (47kW)	1896	12.95-08.99	225404	
1.9 SDI 50	AGP; AQM; (50kW)	1896	08.99-09.01		
1.9 TDI 90	AGR; AHU; ALE; ALH; (66kW)	1896	09.96-09.01	225403	
1.9 TDI 110	AFN; ASV; (81kW)	1896	06.98-09.01	225403	
POLO (6KV5)					
1.4	AKP; (40kW)	1390	12.98-09.01		
1.4	AEX; AKK; AKV; ANW; APQ; AUD; (44kW)	1390	05.97-09.01		
1.4 16V	APE; AUA; (55kW)	1390	10.99-09.01		
1.6	AEH; AFT; AKL; APF; AUR; (74kW)	1595	05.97-09.01		
1.6	AEE; ALM; (55kW)	1598	05.97-09.01		
1.8	ADZ; (66kW)	1781	05.97-09.01		
1.7 SDI	AKW; (42kW)	1716	08.97-09.01	225404	
1.9 SDI	AEY; (47kW)	1896	06.97-09.01	225404	
1.9 SDI	AGP; AQM; (50kW)	1896	08.99-09.01		
1.9 TDI	AGR; AHU; ALE; ALH; (66kW)	1896	05.97-09.01	225403	
1.9 TDI	AFN; ASV; (81kW)	1896	06.98-09.01	225403	

RUVILLE YOUR PARTNER

Volkswagen

					8	265426			1	295405(N)	265426:→001109, ADZ
					8	265427			1	295404(K)	265427:001110→, ADZ; 295404(K):(GS)
									1	295405(K)	265427:ADD; 295405(K):(ST)
									1	295406(K)	295406(K):(GS), (mG)
					8	265427			1	295404(K)	295404(K):(GS)
									1	295405(K)	295405(K):(ST)
									1	295406(K)	295406(K):(GS), (mG)
215411					8	265426			1	295405(K)	295405(K):(ST)
215411					8	265426			1	295405(N)	
									1	295404(K)	295404(K):(GS), 1Y
									1	295405(K)	295404(K):(GS), AEY, →050000
									1	295406(K)	295405(K):(ST)
											295406(K):(GS), 1Y, (mG)
											295406(K):(GS), AEY, →050000, (mG)
215403					8	265427			1	295405(N)	
215402					8	265426			1	295405(N)	225403:AHU, ALE; 215402:AGR, ALH; 265426:AGR, →034858
215409					8	265427			1	295404(K)	215409:AHU, ALE; 265426:AHU, ALE; 295404(K):(GS), AHU
									1	295405(K)	265427:AGR, 034859→;295404(K):(GS), ALE, →576000
									1	295406(K)	265427:ALH; 295405(K):(ST), AHU, ALE
											295406(K):(GS), AHU, (mG)
											295406(K):(GS), ALE, →576000, (mG)
215409					8	265426			1	295405(N)	225403:AFN; 215409:AFN; 265426:AFN
					8	265427			1	295404(K)	265427:ASV; 295404(K):(GS), AFN, →576000
									1	295405(K)	295405(K):(ST), AFN
									1	295406(K)	295406(K):(GS), AFN, →576000, (mG)
	8	235455			8	265402			1	295403(N)	
	8	235453 [6]							1	295403(K)	295403(K):(ST)
					8	265402			1	295403(N)	265402:AKK, ANW, AUD; 295403(N):ANW, AKK
					8	265427			1	295405(N)	265427:AEX, AKV, APQ, ANX; 295405(N):AEX, AKV, ANX, APQ
									1	295403(K)	295403(K):(ST), AEX, 908122→
									1	295404(K)	295403(K):(ST), AKV, 095009→
									1	295405(K)	295403(K):(ST), ANX, APQ, ANW, AKK
									1	295406(K)	295404(K):(GS), AEX, →908121
											295404(K):(GS), AKV, →095008
											295405(K):(ST), AEX, →908121
											295405(K):(ST), AKV, →095009
											295406(K):(GS), AEX, →908121, (mG)
											295406(K):(GS), AKV, →095008, (mG)
	16	235410			16	265402			1	295402(N)	
	16	235400 [6]									
215424					8	265427			1	295401(N)	295401(N):AEH, AKL, APF, AUR
									1	295405(N)	295405(N):AFT
									1	295404(K)	295404(K):(GS), AFT
									1	295405(K)	295405(K):(ST), AFT
									1	295406(K)	295406(K):(GS), AFT, (mG)
					8	265427			1	295405(N)	
									1	295403(K)	295403(K):AEE, ALM, (ST), AEE562758→, ALM000707→
									1	295404(K)	295404(K):(GS), AEE, →562757
									1	295405(K)	295405(K):AEE, ALM, (ST), →AEE562757, →ALM000706
									1	295406(K)	295406(K):(GS), AEE, →562757, (mG)
					8	265426			1	295405(N)	265426:→001109
					8	265427			1	295404(K)	265427:001110→; 295404(K):(GS)
									1	295405(K)	295405(K):(ST)
									1	295406(K)	295406(K):(GS), (mG)
215411					8	265426			1	295405(K)	295405(K):(ST)
215411					8	265426			1	295405(N)	
									1	295404(K)	295404(K):(GS), AEY, →050000
									1	295405(K)	295405(K):(ST)
									1	295406(K)	295406(K):(GS), AEY, →050000, (mG)
215403					8	265427			1	295405(N)	
215402					8	265426			1	295405(N)	225403:AHU, ALE; 215402:AGR, ALH; 265426:AGR, →034858
215409					8	265427			1	295404(K)	215409:AHU, ALE; 265426:AHU, ALE; 295404(K):(GS), AHU
									1	295405(K)	265427:AGR, 034859→;295404(K):(GS), ALE, →576000
									1	295406(K)	265427:ALH; 295405(K):(ST), AHU, ALE
											295406(K):(GS), AHU, (mG)
											295406(K):(GS), ALE, →576000, (mG)
215409					8	265426			1	295405(N)	225403:AFN; 215409:AFN; 265426:AFN

6 siehe Klappseite vorn • see fold in front.

		cm³			
POLO (6KV5)					
1.9 TDI	AFN; ASV; (81kW)	1896	06.98-09.01		
POLO (6N1)					
1.0 50	AER; ALL; (37kW)	999	09.96-10.99		
1.0	AAU; (33kW)	1043	10.94-12.99		
1.0 45	AEV; (33kW)	1043	10.94-09.96		
1.3 55	ADX; (40kW)	1296	10.94-07.95		
1.4; 1.4 55; 1.4 60	AEX; AKV; APQ; (40kW-44kW)	1390	07.95-12.99		
1.4 100	AFH; (74kW)	1390	04.96-10.99		
1.6 75	AEA; AEE; AHS; (55kW)	1598	10.94-10.99		
1.6 16V GTI 120	AJV; (88kW)	1598	09.98-10.99		
1.7 SDI	AHG; (42kW)	1716	04.97-10.99	225404	
1.7 SDI; 1.7 SDI 60	AKU; (44kW)	1716	08.97-12.99	225404	
1.9 D; 1.9 D 64	AEF; (47kW)	1896	10.94-12.99	225419	
1.9 SDI; 1.9 SDI 64	AGD; (47kW)	1896	07.96-12.99	225404	
POLO (6N2)					
1.0	ALD; AUC; (37kW)	999	10.99-09.01		
1.4	AKP; (40kW)	1390	10.99-09.01		
1.4	AKK; AUD; (44kW)	1390	10.99-09.01		
1.4 16V	AFK; AHW; APE; AQQ; AUA; AUB; (55kW-74kW)	1390	10.99-09.01		
1.6 16V GTI	ARC; AVY; (92kW)	1598	10.99-09.01		
1.4 TDI	AMF; (55kW)	1422	10.99-09.01		
1.7 SDI	AKU; (44kW)	1716	10.99-09.01	225404	

RUVILLE YOUR PARTNER

Volkswagen

					8	265427			1	295404(K)	265427: ASV; 295404(K):(GS), AFN, →576000
									1	295405(K)	295405(K):(ST), AFN
									1	295406(K)	295406(K):(GS), AFN, →576000, (mG)
					8	265427			1	295405(N)	
									1	295403(K)	295403(K):(ST), AER, 220084→
									1	295404(K)	295403(K):(ST), ALL
									1	295405(K)	295404(K):(GS), AER, →220083
									1	295406(K)	295405(K):(ST), AER, →220083
											295406(K):(GS), AER, →220083, (mG)
					8	265426			1	295405(N)	
									1	295404(K)	295404(K):(GS)
									1	295405(K)	295405(K):(ST)
									1	295406(K)	295406(K):(GS), (mG)
					8	265426			1	295404(K)	295404(K):(GS)
									1	295405(K)	295405(K):(ST)
									1	295406(K)	295406(K):(GS), (mG)
					8	265427			1	295404(K)	295404(K):(GS)
									1	295405(K)	295405(K):(ST)
									1	295406(K)	295406(K):(GS), (mG)
					8	265427			1	295405(N)	
									1	295403(K)	295403(K):(ST), AEX, 908122→
									1	295404(K)	295403(K):(ST), APQ
									1	295405(K)	295404(K):(GS), AEX, →908121
									1	295406(K)	295404(K):(GS), AKV, →095008
											295405(K):(ST), AEX, →908121
											295406(K):(GS), AEX, →908121, (mG)
											295406(K):(GS), AKV, →095008, (mG)
					16	265416			2	295405(N)	
									1	295404(K)	295404(K):(GS), →030001
									1	295405(K)	295405(K):(ST)
									1	295406(K)	295406(K):(GS), →030001, (mG)
					8	265427			1	295405(N)	265427: AEA; AEE
									1	295403(K)	295403(K):(ST), AEE, AHS, AEE562758→, AHS050001→
									1	295404(K)	295404(K):(GS), AEA
									1	295405(K)	295404(K):(GS), AEE, →562757
									1	295406(K)	295404(K):(GS), AHS, →050000
											295405(K):(ST), AEA
											295405(K):(ST), AEE, AHS, →AEE562757, →AHS050000
											295406(K):(GS), AEA, (mG)
											295406(K):(GS), AEE, →562757, (mG)
											295406(K):(GS), AHS, →050000, (mG)
	16	235410			16	265402					
	16	235400 [6]									
215411					8	265426			1	295404(K)	295404(K):(GS), AHG, →010000
									1	295405(K)	295405(K):(ST)
									1	295406(K)	295406(K):(GS), AHG, →010000, (mG)
215411					8	265426			1	295405(N)	
									1	295404(K)	295404(K):(GS), AKU, →013000
									1	295405(K)	295405(K):(ST)
									1	295406(K)	295406(K):(GS), AKU, →013000, (mG)
215419					8	265426			1	295405(N)	
									1	295404(K)	295404(K):(GS)
									1	295405(K)	295405(K):(ST)
									1	295406(K)	295406(K):(GS), (mG)
215411					8	265426			1	295404(K)	295404(K):(GS), AGD, →015000
									1	295405(K)	295405(K):(ST)
									1	295406(K)	295406(K):(GS), AGD, →015000, (mG)
	8	235455			8	265402			1	295403(N)	
	8	235453 [6]									
	8	235455			8	265402			1	295403(N)	
	8	235453 [6]							1	295403(K)	295403(K):(ST)
	8	235455			8	265402			1	295403(N)	295403(N): ANW, AKK
	8	235453 [6]							1	295405(N)	295405(N): AEX, AKV, ANX, APQ
									1	295403(K)	295403(K):(ST)
	16	235410			16	265402			1	295402(N)	
	16	235400 [6]									
	16	235410			16	265402					
	16	235400 [6]									
215406					6	265403			1	295404(K)	295404(K):(GS)
									1	295406(K)	295406(K):(GS), (mG)
215411					8	265426			1	295405(N)	

6 siehe Klappseite vorn • see fold in front.

Volkswagen

		cm³			
POLO (6N2)					
1.7 SDI	AKU; (44kW)	1716	10.99-09.01		
1.9 D	AEF; (47kW)	1896	10.99-09.01	225419	
1.9 SDI	AGD; ASX; (47kW)	1896	10.99-09.01	225404	
POLO (6R_)					
1.2 TSI	CBZB; (77kW)	1197	11.09-		
1.2	CGPA; CGPB; (44kW-51kW)	1198	06.09-		
1.4	CGGB; (63kW)	1390	06.09-		
1.2 TDI	CFWA; (55kW)	1199	10.09-		
1.6 TDI	CAYA; CAYB; CAYC; (55kW-77kW)	1598	06.09-		
POLO (86)					
0.9; 1.1; 1.3	HA; HB; HC; HH; (29kW-44kW)	895-1272	03.75-09.81		
POLO (86C, 80)					
0.9	HA; (29kW)	895	10.81-12.81		
1.0	GL; (29kW)	1043	10.81-10.86		
1.0	AAK; AAU; ACM; HZ; (33kW)	1043	01.85-09.94		
1.1	HB; (37kW)	1093	10.81-09.89		
1.3	HK; MH; NZ; (40kW)	1272	08.83-09.94		
1.3	2G; AAV; MH; NZ; (40kW)	1272	07.87-09.94		
1.3	AAV; (40kW)	1272	08.92-07.94		
1.3	GT; HJ; (43kW)	1272	10.81-07.82		
1.3	HH; (44kW)	1272	10.81-07.83		
1.3	GK; (55kW)	1272	09.82-09.89		
1.3	3F; (55kW)	1272	10.89-09.94		
1.3; 1.3 G40	3F; PY; (57kW-85kW)	1272	01.87-09.94		
1.3 D; 1.4 D	1W; MN; (33kW-35kW)	1272-1398	08.86-09.94		

RUVILLE YOUR PARTNER

Volkswagen

									1	295404(K)	295404(K):(GS), AKU, →013000
									1	295405(K)	295405(K):(ST)
									1	295406(K)	295406(K):(GS), AKU, →013000, (mG)
215419					8	265426			1	295405(N)	
									1	295404(K)	295404(K):(GS)
									1	295405(K)	295405(K):(ST)
									1	295406(K)	295406(K):(GS), (mG)
215411					8	265426			1	295404(K)	225404: AGD; 215411: AGD; 295404(K):(GS), AGD, →015000
									1	295405(K)	295405(K):(ST)
									1	295406(K)	295406(K):(GS), AGD, →015000, (mG)
					8	265402					
	12	235410			12	265402					
	12	235400 [6]									
	16	235410			16	265402					
	16	235400 [6]									
	12	235406			12	265404					
	16	235406			16	265404					
									1	295405(N)	
									1	295404(K)	295404(K):(GS)
									1	295405(K)	295405(K):(ST)
									1	295406(K)	295406(K):(GS), (mG)
									1	295405(N)	
									1	295404(K)	295404(K):(GS)
									1	295405(K)	295405(K):(ST)
									1	295406(K)	295406(K):(GS), (mG)
									1	295405(N)	
									1	295404(K)	295404(K):(GS)
									1	295405(K)	295405(K):(ST)
									1	295406(K)	295406(K):(GS), (mG)
					8	265426			1	295405(N)	
									1	295404(K)	295404(K):(GS)
									1	295405(K)	295405(K):(ST)
									1	295406(K)	295406(K):(GS), (mG)
									1	295405(N)	
									1	295404(K)	295404(K):(GS)
									1	295405(K)	295405(K):(ST)
									1	295406(K)	295406(K):(GS), (mG)
					8	265426			1	295405(N)	265426: MH
									1	295404(K)	295404(K):(GS)
									1	295405(K)	295405(K):(ST)
									1	295406(K)	295406(K):(GS), (mG)
					8	265426			1	295405(N)	265426: MH
									1	295404(K)	295404(K):(GS)
									1	295405(K)	295405(K):(ST)
									1	295406(K)	295406(K):(GS), (mG)
					8	265426			1	295405(N)	
									1	295404(K)	295404(K):(GS)
									1	295405(K)	295405(K):(ST)
									1	295406(K)	295406(K):(GS), (mG)
									1	295404(K)	295404(K):(GS)
									1	295405(K)	295405(K):(ST)
									1	295406(K)	295406(K):(GS), (mG)
									1	295405(N)	
									1	295404(K)	295404(K):(GS)
									1	295405(K)	295405(K):(ST)
									1	295406(K)	295406(K):(GS), (mG)
									1	295405(N)	
									1	295404(K)	295404(K):(GS)
									1	295405(K)	295405(K):(ST)
									1	295406(K)	295406(K):(GS), (mG)
					8	265426			1	295405(N)	
									1	295404(K)	295404(K):(GS)
									1	295405(K)	295405(K):(ST)
									1	295406(K)	295406(K):(GS), (mG)
					8	265426			1	295405(N)	
									1	295404(K)	295404(K):(GS)
									1	295405(K)	295405(K):(ST)
									1	295406(K)	295406(K):(GS), (mG)
					8	265426			1	295405(N)	
									1	295404(K)	295404(K):(GS)

6 siehe Klappseite vorn • see fold in front.

		cm³			
Volkswagen					
POLO (86C, 80)					
1.3 D; 1.4 D	1W; MN; (33kW-35kW)	1272-1398	08.86-09.94		
POLO (9N_)					
1.2	AWY; BBM; BMD; (40kW-44kW)	1198	01.02-		
1.2	AZQ; BME; BZG; (47kW-51kW)	1198	10.01-		
1.4; 1.4 16V	AUA; BBY; BKY; BUD; (55kW-59kW)	1390	10.01-		
1.4 FSI	AXU; (63kW)	1390	02.02-07.06		
1.4; 1.4 16V	AUB; BBZ; (74kW)	1390	10.01-		
1.6 16V	BTS; (77kW)	1598	05.06-		
1.6	BAH; (74kW)	1599	09.02-		
1.6 Total Flex	BPA; (74kW)	1599	10.04-		
1.8 GTI; 1.8 GTi Cup Edition	BBU; BJX; (110kW-132kW)	1781	09.05-		
2.0	BBX; (85kW)	1984	09.02-		
1.4 TDI	BNM; BWB; (51kW)	1422	04.05-		
1.4 TDI	AMF; BAY; (55kW)	1422	10.01-06.05		
1.4 TDI	BAY; BMS; BNV; (55kW-59kW)	1422	07.03-		
1.9 SDI	ASY; (47kW)	1896	10.01-		
1.9 TDI	ATD; AXR; BMT; (74kW)	1896	10.01-		
1.9 TDI	ASZ; BLT; (96kW)	1896	11.03-		
SANTANA (32B)					
1.3	FZ; (44kW)	1272	08.81-07.83		
1.6	WV; YP; (55kW-63kW)	1588	08.81-12.84		
1.6	DT; (55kW)	1595	08.81-12.84		
1.8	DS; (66kW)	1781	01.83-12.84		
1.9	WN; (85kW)	1921	08.81-07.83		
2.0	HP; JS; (85kW)	1994	08.83-12.84		
2.1	WE; (85kW)	2144	08.82-12.83		
1.6 D; 1.6 TD	CR; CY; JK; (40kW-51kW)	1588	08.81-12.84	225401	
SCIROCCO					
1.4 TSI	CAVD; CAXA; (90kW-118kW)	1390	09.08-		
2.0 TSI	CAWB; CCZB; (147kW-155kW)	1984	09.08-		
2.0 R	CDLA; (195kW)	1984	11.09-		
2.0 TDI	CBBB; CBDB; (103kW-125kW)	1968	09.08-		
SCIROCCO (53)					
1.1	FA; (37kW)	1093	04.74-07.79		
1.3	GF; (44kW)	1272	08.79-07.80		
1.4	JB; (51kW)	1457	08.77-07.80		
1.5	FH; (51kW)	1471	02.74-12.75		

RUVILLE YOUR PARTNER

Volkswagen

									1	295405(K)	295405(K):(ST)
									1	295406(K)	295406(K):(GS), (mG)
					6	265402					
	12	235410			12	265402					
	12	235400 [6]									
	16	235410			16	265402			1	295402(N)	
	16	235400 [6]									
	16	235410			16	265402					
	16	235400 [6]									
	16	235410			16	265402			1	295402(N)	
	16	235400 [6]									
	16	235404			16	265402					
	16	235455			16	265402					
	16	235453 [6]									
	8	235455			8	265402					
	8	235453 [6]									
					12	265704					265704:(ELV)
					8	265705					265705:(ALV)
					8	265427					
215406					6	265403					
215406					6	265403			1	295404(K)	295404(K):(GS), AMF
									1	295406(K)	295406(K):(GS), AMF, (mG)
215406					6	265403					
215403					8	265427					
215404					8	265403					215404: AXR; ATD
					8	265403			1	295401(N)	295401(N): ASZ
									1	295405(N)	
									1	295404(K)	295404(K):(GS)
									1	295406(K)	295406(K):(GS), (mG)
215410					8	265430			1	295405(N)	
									1	295404(K)	295404(K):(GS)
									1	295405(K)	295405(K):(ST)
									1	295406(K)	295406(K):(GS), (mG)
215425											
					8	265430			1	295405(N)	
									1	295404(K)	295404(K):(GS)
									1	295405(K)	295405(K):(ST)
									1	295406(K)	295406(K):(GS), (mG)
					8	265430			1	295405(N)	
									1	295404(K)	295404(K):(GS)
									1	295406(K)	295406(K):(GS), (mG)
					10	265426			1	295405(N)	265426: HP, {S}, {CZ}; 295405(N): HP, {S}, {CZ}
									1	295404(K)	265426: JS; 295405(N): JS
									1	295406(K)	295404(K):(GS)
											295406(K):(GS), (mG)
					8	265430			1	295405(N)	265430:{S}, {CZ}; 295405(N):{S}, {CZ}
									1	295404(K)	295404(K):(GS)
									1	295406(K)	295406(K):(GS), (mG)
215420					8	265430			1	295405(N)	
									1	295404(K)	295404(K):(GS)
									1	295405(K)	295405(K):(ST)
									1	295406(K)	295406(K):(GS), (mG)
	16	235404			16	265402					
	16	235700			16	265707					
	16	235408			16	265707					
	16	235406			16	265404					
									1	295405(N)	
									1	295404(K)	295404(K):(GS)
									1	295406(K)	295406(K):(GS), (mG)
									1	295405(N)	
									1	295404(K)	295404(K):(GS)
									1	295405(K)	295405(K):(ST)
									1	295406(K)	295406(K):(GS), (mG)
215410					8	265430			1	295405(N)	
									1	295404(K)	295404(K):(GS)
									1	295405(K)	295405(K):(ST)
									1	295406(K)	295406(K):(GS), (mG)
					8	265430			1	295405(N)	
									1	295404(K)	295404(K):(GS)

6 siehe Klappseite vorn • see fold in front.

		cm³			
Volkswagen					
SCIROCCO (53)					
1.5	FH; (51kW)	1471	02.74-12.75		
1.5	YJ; ZB; (55kW)	1471	02.74-08.75		
1.5	ZC; (63kW)	1471	02.74-12.77		
1.6	FN; FP; FR; (55kW-63kW)	1588	08.75-07.80		
1.6	EG; (81kW)	1588	06.76-07.80		
SCIROCCO (53B)					
1.3	GF; (44kW)	1272	08.80-12.83		
1.4; 1.6	FR; JB; (51kW-63kW)	1457-1588	08.80-04.84		
1.6	EG; (81kW)	1588	08.80-07.82		
1.6	RE; (53kW)	1595	04.86-07.90		
1.6	EW; (55kW)	1595	01.83-12.89		
1.8	EX; (66kW)	1781	08.83-07.92		
1.8	JH; (70kW)	1781	11.85-07.92		
1.8	DX; EV; JJ; PB; (82kW)	1781	08.82-12.89		
1.8 16V	PL; (95kW)	1781	03.86-07.92		
1.8 16V	KR; (102kW)	1781	10.85-07.89		
SHARAN					
1.8 T 20V	AJH; AWC; (110kW)	1781	09.97-		
2.0	ADY; ATM; (85kW)	1984	09.95-		
2.0 LPG	ATM; (85kW)	1984	05.08-		
2.8 VR6	AAA; AMY; (128kW)	2792	09.95-04.00		
2.8 V6 24V; 2.8 VR6 24V	AYL; (150kW)	2792	04.00-		
1.9 TDI	1Z; AHU; ANU; (66kW)	1896	09.95-	225403	

RUVILLE YOUR PARTNER

Volkswagen

									1	295405(K)	295405(K):(ST)
									1	295406(K)	295406(K):(GS), (mG)
					8	265430			1	295405(N)	295405(N): YJ, ZB, →ZB0203000, YJ0000001→
									1	295404(K)	295404(K):(GS), YJ, ZB, →ZB0203000, YJ0000001→
									1	295405(K)	295405(K):(ST), YJ, ZB, →ZB0203000, YJ0000001→
									1	295406(K)	295406(K):(GS), YJ, ZB, →ZB0203000, YJ0000001→, (mG)
					8	265430			1	295405(N)	
									1	295404(K)	295404(K):(GS)
									1	295405(K)	295405(K):(ST)
									1	295406(K)	295406(K):(GS), (mG)
215410					8	265430			1	295405(N)	
									1	295404(K)	295404(K):(GS)
									1	295405(K)	295405(K):(ST)
									1	295406(K)	295406(K):(GS), (mG)
					8	265430			1	295405(N)	
									1	295404(K)	295404(K):(GS)
									1	295405(K)	295405(K):(ST)
									1	295406(K)	295406(K):(GS), (mG)
									1	295405(N)	
									1	295404(K)	295404(K):(GS)
									1	295406(K)	295406(K):(GS), (mG)
215410					8	265430			1	295405(N)	
									1	295404(K)	295404(K):(GS)
									1	295405(K)	295405(K):(ST)
									1	295406(K)	295406(K):(GS), (mG)
					8	265430			1	295405(N)	
									1	295404(K)	295404(K):(GS)
									1	295405(K)	295405(K):(ST)
									1	295406(K)	295406(K):(GS), (mG)
					8	265426			1	295405(N)	
									1	295404(K)	295404(K):(GS)
									1	295405(K)	295405(K):(ST)
									1	295406(K)	295406(K):(GS), (mG)
215425					8	265426 [1]			1	295405(N)	215425: J#000001→; 265430: →F#060000; 265426: G#000001→
									1	295404(K)	295404(K):(GS)
									1	295405(K)	295405(K):(ST)
									1	295406(K)	295406(K):(GS), (mG)
					8	265426 [1]			1	295405(N)	265430: →F#060000; 265426: G#000001→
									1	295404(K)	295404(K):(GS)
									1	295405(K)	295405(K):(ST)
									1	295406(K)	295406(K):(GS), (mG)
					8	265426 [1]			1	295405(N)	265430: →F#060000, →15F035000; 265426: G#000001→, 15G000001→
									1	295404(K)	295404(K):(GS)
									1	295405(K)	295405(K):(ST)
									1	295406(K)	295406(K):(GS), (mG)
					8	265426 [1]			1	295405(N)	265430: DX, EV; 265426: PB
									1	295404(K)	295404(K):(GS)
									1	295405(K)	295405(K):(ST)
									1	295406(K)	295406(K):(GS), (mG)
					8	265426			1	295405(N)	
									1	295404(K)	295404(K):(GS)
									1	295405(K)	295405(K):(ST)
									1	295406(K)	295406(K):(GS), (mG)
					16	265426			1	295405(N)	
									1	295404(K)	295404(K):(GS)
									1	295405(K)	295405(K):(ST)
									1	295406(K)	295406(K):(GS), (mG)
					12	265704			2	295401(N)	265704:(ELV)
					8	265705					265705:(ALV)
					8	265426			1	295401(N)	265426: ADY, →000778; 295401(N): ATM
					8	265427			1	295405(N)	265427: ADY, 000779→; 295405(N): ADY
									1	295404(K)	265427: ATM; 295404(K):(GS), ADY
									1	295405(K)	295405(K):(ST), ADY
									1	295406(K)	295406(K):(GS), ADY, (mG)
					8	265427			1	295401(N)	265427: ATM; 295401(N): ATM
					12	265426			1	295404(K)	295404(K):(GS)
									1	295406(K)	295406(K):(GS), (mG)
	24	235701			24	265703					
215409					8	265403			1	295401(N)	225403: 1Z, AHU; 215409: 1Z, AHU; 265403: ANU; 295401(N): ANU

1 siehe Klappseite vorn • see fold in front.

		cm³			
SHARAN					
1.9 TDI	1Z; AHU; ANU; (66kW)	1896	09.95-		
1.9 TDI	AFN; AVG; (81kW)	1896	09.96-04.00	225403	
1.9 TDI	ASZ; AUY; BVK; (85kW-96kW)	1896	04.00-		
1.9 TDI	BTB; (110kW)	1896	06.05-		
2.0 TDI	BRT; (103kW)	1968	11.05-		
SPACEFOX					
1.6; 1.6 Total Flex	BAH; BLH; BPA; (74kW)	1599	03.06-		
1.9 SDI	ASY; (47kW)	1896	09.07-		
TIGUAN					
1.4 TSI; 1.4 TSI FWD	BWK; CAVA; (110kW)	1390	09.07-		
2.0 TFSI	CAWA; CAWB; CCZA; (125kW-147kW)	1984	09.07-		
2.0 TDI; 2.0 TDI FWD	CBAA; CBAB; CBBB; (100kW-125kW)	1968	09.07-		
TOUAREG					
3.2 V6; 3.6 V6 FSI	AZZ; BAA; BHK; BHL; BKJ; BMX; (162kW-206kW)	3189-3597	10.02-05.10		
4.2 V8 FSI	BAR; (257kW)	4163	12.06-05.10		
4.2 V8	AXQ; BHX; (228kW)	4172	12.02-11.06		
6.0 W12	BJN; (331kW)	5998	03.05-05.10		
2.5 R5 TDI	BLK; (120kW)	2461	08.03-05.10		
2.5 R5 TDI	BAC; BPE; (128kW)	2461	01.03-05.10		
3.0 TDI; 3.0 V6 TDI	BKS; BUN; CASA; CASB; CASC; (155kW-176kW)	2967	11.04-05.10		
5.0 R50 TDI; 5.0 V10 TDI	AYH; BLE; BWF; CBWA; (230kW-257kW)	4921	10.02-05.10		
TOUAREG (7P5)					
3.0 V6 TSI Hybrid	CGEA; CGFA; (245kW)	2995	04.10-		
3.6 V6 FSI	CGRA; (206kW)	3597	04.10-		
3.0 V6 TDI	CASA; (176kW)	2967	04.10-		
4.2 V8 TDI	CKDA; (250kW)	4134	04.10-		
TOURAN					
1.4 Fsi; 1.4 TSI; 1.4 TSI EcoFuel	BLG; BMY; CAVB; CAVC; CDGA; (103kW-125kW)	1390	02.06-		
1.6	BGU; BSE; BSF; (75kW)	1595	07.03-		
1.6 FSI	BAG; BLF; BLP; (85kW)	1598	02.03-		
2.0 EcoFuel	BSX; (80kW)	1984	02.06-		
2.0 FSI	AXW; BLR; BLX; BLY; (110kW)	1984	10.03-		
1.6 TDI	CAYC; (77kW)	1598	05.10-		
1.9 TDI	AVQ; BKC; BLS; BRU; BXE; BXF; BXJ; (66kW-77kW)	1896	02.03-		
2.0 TDI	AZV; BKD; (100kW-103kW)	1968	02.03-		
2.0 TDI	BMM; (103kW)	1968	12.05-		
2.0 TDI	BMN; (125kW)	1968	12.05-		
TRANSPORTER III					
1.6 D; 1.6 TD	CS; JX; (37kW-51kW)	1588-1589	01.81-07.92	225401	
1.7 D	KY; (42kW)	1715-1716	08.85-07.92	225417	
TRANSPORTER IV					
1.8	PD; (49kW)	1781	12.90-07.92		
2.0	AAC; (62kW)	1968	07.90-04.03		

RUVILLE YOUR PARTNER

Volkswagen

					8	265426			1	295405(N)	265426: AHU, 1Z; 295405(N): AHU, 1Z
									1	295404(K)	295404(K):(GS), 1Z, AHU
									1	295405(K)	295405(K):(ST), AHU, 1Z
									1	295406(K)	295406(K):(GS), 1Z, AHU, (mG)
215409					8	265426			1	295405(N)	
									1	295404(K)	295404(K):(GS), AFN, →576000
									1	295405(K)	295405(K):(ST)
									1	295406(K)	295406(K):(GS), AFN, →576000, (mG)
215404					8	265403			1	295401(N)	
215404					8	265403					
					16	265403					
	8	235455			8	265402					
	8	235453 [6]									
					8	265427					
	16	235404			16	265402					
	16	235700			16	265707					
	16	235406			16	265404					
	24	235701			24	265703					
	32	235700			32	265165					
	8	245404 [6]									245404:(ELV), AXQ
	8	245405 [6]									245405:(ALV), AXQ
	48	235701			48	265703					265703: 5#075001→
					48	265716					265716: →5#075000
					10	265403					
215405					10	265403					215405: BAC
215431											215431: BPE
	24	235406			24	265404					
					20	265403					
	24	235411			24	265707					
	24	235407			24	265703					
	24	235406			24	265404					
	32	235406			32	265404					
	16	235404			16	265402					
	8	235409			8	265165			1	295401(N)	
	8	235402 [6]									
	16	235404			16	265402					235404: BLF, BLP
	16	235410									235410: BAG
	16	235400 [6]									235400: BAG
					8	265427					
	16	235408			16	265165					
	16	235406			16	265404					
215404					8	265403					
215421											215421:(ELV)
215422											215422:(ALV)
					8	265403					
215421											215421:(ELV)
215423											215423:(ALV)
215420					8	265430			1	295405(N)	
									1	295404(K)	295404(K):(GS)
									1	295405(K)	295405(K):(ST)
									1	295406(K)	295406(K):(GS), (mG)
215417					8	265430			1	295405(N)	
									1	295404(K)	295404(K):(GS)
									1	295405(K)	295405(K):(ST)
									1	295406(K)	295406(K):(GS), (mG)
					8	265426			1	295405(N)	
									1	295404(K)	295404(K):(GS)
									1	295405(K)	295405(K):(ST)
									1	295406(K)	295406(K):(GS), (mG)
					8	265426			1	295405(N)	265426: →T#260000
					8	265427			1	295404(K)	265427: T#260001→; 295404(K):(GS)
									1	295405(K)	295405(K):(ST)
									1	295406(K)	295406(K):(GS), (mG)

6 siehe Klappseite vorn • see fold in front.

		cm³			
TRANSPORTER IV					
2.5	AAF; ACU; AEN; AEU; (81kW)	2461	11.90-04.03		
2.5	AET; APL; AVT; (85kW)	2461	07.96-04.03		
2.8; 2.8 VR 6; 2.8 VR6	AES; (103kW)	2792	11.95-05.00		
2.8 V6	AMV; (150kW)	2792	04.00-04.03		
1.9 D	1X; (44kW-45kW)	1896	07.90-04.03	225419	
1.9 TD	ABL; (50kW)	1896	10.92-04.03	225419	
2.4 D	AJA; (55kW)	2370	08.97-04.03	225415	
2.4 D	AAB; (57kW)	2370	07.90-09.98	225414 225415	
2.5 TDI	AJT; AYY; (65kW)	2461	05.98-04.03		
2.5 TDI	ACV; AUF; AXL; AYC; (75kW)	2461	09.95-04.03		
2.5 TDI	AHY; AXG; (111kW)	2461	05.98-04.03		
TRANSPORTER V					
2.0	AXA; (85kW)	1984	11.03-		
3.2; 3.2 V6	BDL; BKK; CFLA; (170kW-173kW)	3189	04.03-		
1.9 TDI	BRR; (62kW)	1896	01.06-		
1.9 TDI	AXC; (63kW)	1896	04.03-		
1.9 TDI	BRS; (75kW)	1896	06.06-		
1.9 TDI	AXB; (77kW)	1896	04.03-		
2.0 BiTDI; 2.0 TDI	CAAA; CAAB; CAAC; CFCA; (62kW-132kW)	1968	09.09-		
2.5 TDI	AXD; BNZ; (96kW)	2461	04.03-		
2.5	BLJ; (120kW)	2461	11.03-		
2.5 TDI	AXE; BPC; (128kW)	2461	04.03-		
VENTO					
1.4	ABD; AEX; (40kW-44kW)	1390	11.91-09.98		
1.6	AEK; AFT; (74kW)	1595	10.94-09.98		
1.6	ABU; AEA; AEE; (55kW)	1598	09.92-09.98		
1.8	AAM; (55kW)	1781	11.91-09.98		
1.8	ABS; ADZ; (66kW)	1781	11.91-09.98		

RUVILLE YOUR PARTNER

Volkswagen

215428					10	265426			1	295405(N)	215428: AAF; ACU; AEU; 265426: AAF, ACU, AEN, →T#260000; 295405(N): AAF, AEN, ACU
					10	265427			1	295404(K)	265427: AAF, ACU, AEN, T#260001→; 295404(K):(GS), AEU, →002001
									1	295406(K)	265427: AEU; 295406(K):(GS), AEU, →002001, (mG)
215428					10	265427			1	295404(K)	295404(K):(GS), AET, →017277
									1	295406(K)	295406(K):(GS), AET, →017277, (mG)
					12	265426			1	295404(K)	295404(K):(GS)
									1	295406(K)	295406(K):(GS), (mG)
	24	235701			24	265703					
215419					8	265426			1	295405(N)	
									1	295404(K)	295404(K):(GS)
									1	295405(K)	295405(K):(ST)
									1	295406(K)	295406(K):(GS), (mG)
215419					8	265426			1	295405(N)	225419: →T#260000; 215419: →T#260000; 265426: →T#260000
					8	265427			1	295404(K)	265427: T#260001→; 295404(K):(GS)
									1	295405(K)	295405(K):(ST)
									1	295406(K)	295406(K):(GS), (mG)
215415					10	265426			1	295404(K)	295404(K):(GS), AJA, →028554
									1	295406(K)	295406(K):(GS), AJA, →028554, (mG)
215414					10	265426			1	295405(N)	225414: →270182; 215414: →270182; 295405(N):→08.95, →270182, 270725-274330
215415									1	295404(K)	225414: 270725-274330; 215414: 270725-274330; 295405(N):→08.95, →270182, 270725-274330
									1	295406(K)	225415: 270183-270724; 215415: 270183-270724; 295404(K):(GS)
											225415: 274331→; 215415: 274331→; 295406(K):(GS), (mG)
215702					10	265426					
215702					10	265426			1	295404(K)	295404(K):(GS), →115395
									1	295406(K)	295406(K):(GS), →115395, (mG)
					10	265426					
					8	265427					
	24	235701			24	265703					
					8	265403					
215404					8	265401					
					8	265403					
215404					8	265401					
	16	235406			16	265404					
215405					10	265403					215405: AXD
215431											215431: BNZ
					10	265403					
215405					10	265403					215405: AXE
215431											215431: BPC
					8	265426			1	295405(N)	265426: ABD
					8	265427			1	295403(K)	265427: AEX; 295403(K):(ST), AEX, 908122→
									1	295404(K)	295404(K):(GS), ABD
									1	295405(K)	295404(K):(GS), AEX, →908121
									1	295406(K)	295405(K):(ST), ABD
											295405(K):(ST), AEX, →908121
											295406(K):(GS), ABD, (mG)
											295406(K):(GS), AEX, →908121, (mG)
215424					8	265426			1	295404(K)	215424: AFT; 265426: AEK, →000813; 295404(K):(GS)
					8	265427			1	295405(K)	265427: AEK, 000814→; 295405(K):(ST)
									1	295406(K)	265427: AFT; 295406(K):(GS), (mG)
					8	265426			1	295405(N)	265426: ABU
					8	265427			1	295403(K)	265427: AEE; AEA; 295403(K):(ST), AEE, 562758→
									1	295404(K)	295404(K):(GS), ABU, AEA
									1	295405(K)	295404(K):(GS), AEE, →562757
									1	295406(K)	295405(K):(ST), ABU, AEA
											295405(K):(ST), AEE, →562757
											295406(K):(GS), ABU, AEA, (mG)
											295406(K):(GS), AEE, →562757, (mG)
215425					8	265426			1	295405(N)	265426: →408197
					8	265427			1	295404(K)	265427: 408198→; 295404(K):(GS)
									1	295405(K)	295405(K):(ST)
									1	295406(K)	295406(K):(GS), (mG)
					8	265426			1	295405(N)	265426: →001109, ADZ
					8	265427			1	295404(K)	265426: →935645, ABS; 295404(K):(GS)
									1	295405(K)	265427: 001110→, ADZ; 295405(K):(ST)
									1	295406(K)	265427: 935646→, ABS; 295406(K):(GS), (mG)

		cm³			

Volkswagen

VENTO					
2.0 GL	AAC; (62kW)	1968	11.91-07.98		
2.0	2E; ADY; AGG; AKR; (85kW)	1984	11.91-09.98		
2.8 VR6	AAA; (128kW)	2792	01.92-09.98		
1.9 SDI	AEY; (47kW)	1896	04.97-09.98	225404	
1.9 D	1Y; (48kW)	1896	11.91-09.98	225419	
1.9 TD	AAZ; (55kW)	1896	11.91-09.98	225419	
1.9 TDI	1Z; AHU; ALE; (66kW)	1896	09.93-09.98	225403	
1.9 TDI	AFN; (81kW)	1896	04.96-09.98	225403	

Volvo

240					
2.1; 2.3; 2.3 KAT	B21F; B230E; B230F; (80kW-100kW)	2127-2316	08.80-07.93		
2.4 D	D24; (58kW-60kW)	2383	08.78-08.93		
340-360					
2.0	B200E; B200F; (80kW-82kW)	1986	08.86-07.89		
740					
2.0; 2.3	B200F; B230F; (82kW-83kW)	1986-2315	08.85-07.91		
2.3	B230F; B23A; (84kW)	2316	08.84-07.90		
2.3	B230E; B230F; (85kW-96kW)	2316	08.84-07.92		
2.3	B234F; (111kW-114kW)	2316	08.88-08.92		
2.3 TURBO	B230FT; (115kW)	2316	08.86-07.89		
2.3	B234F; (117kW)	2316	08.87-07.89		
2.3 TURBO	B230FT; B230GT; (121kW-140kW)	2316	08.89-07.90		
2.4 D	D24; (60kW)	2383	08.84-07.92		
2.4 TD; 2.4 TD Interc.	D24T; D24TIC; (80kW-90kW)	2383	09.85-07.92	226507	
760					
2.4 TD; 2.4 TD Interc.	D24T; D24TIC; (80kW-85kW)	2383	08.82-07.92	226507	
850					
2.0 (LS); 2.0 (LW)	B5202S; (93kW)	1984	08.94-12.96		
2.0 TURBO (LS); 2.3 T5 (LS); 2.3 T5 (LW)	B5204FT; B5204T; B5234FT; (155kW-166kW)	1984-2319	02.93-12.96		
2.5 (LS); 2.5 (LW)	B5252; B5252S; (103kW-106kW)	2435	06.91-12.96		
2.5 (LS); 2.5 (LW)	B5254S; (125kW)	2435	08.91-12.96		
2.5 TDI (LS); 2.5 TDI (LW)	D5252T; (103kW)	2461	08.95-12.96		
940					
2.0	B200F; (82kW)	1986	01.92-07.94		
2.3	B234F; B234G; (114kW)	2316	08.90-07.91		
2.3 TURBO	B230FT; (121kW)	2316	08.90-07.94		
2.4 D	D24; (60kW)	2383	08.90-12.94		
2.4 TD; 2.4 TD Interc.	D24T; D24TIC; (80kW-90kW)	2383	08.90-12.94	226507	
940 II					
2.3 TURBO	B230FT; (121kW-126kW)	2316	08.94-10.98		
2.4 TD Interc.	D24TIC; (90kW)	2383	08.94-10.98	226507	
960					
2.0	B204E; B204FT; (103kW-140kW)	1986	08.90-09.93		
2.4 TD Interc.	D24TIC; (85kW)	2383	09.91-07.94	226507	

RUVILLE YOUR PARTNER

Volkswagen → Volvo

					8	265426					265426: →T#260000
					8	265427					265427: T#260001→
215424					8	265426			1	295405(N)	215424: AGG; AKR; 265426: 2E, →565664
					8	265427			1	295404(K)	265426: ADY, →000778; 295404(K):(GS)
									1	295405(K)	265427: 2E, 565665→; 295405(K):(ST)
									1	295406(K)	265427: ADY, 000779→; 295406(K):(GS), (mG)
											265427: AGG, AKR
					12	265426			1	295404(K)	295404(K):(GS)
									1	295406(K)	295406(K):(GS), (mG)
215411					8	265426			1	295405(N)	
									1	295404(K)	295404(K):(GS), AEY, →050000
									1	295405(K)	295405(K):(ST)
									1	295406(K)	295406(K):(GS), AEY, →050000, (mG)
215419					8	265426			1	295405(N)	
									1	295404(K)	295404(K):(GS)
									1	295405(K)	295405(K):(ST)
									1	295406(K)	295406(K):(GS), (mG)
215419					8	265426			1	295405(N)	225419: 1HN000001-1HW500000; 215419: 1HN000001-1HW500000
									1	295404(K)	295404(K):(GS)
									1	295405(K)	295405(K):(ST)
									1	295406(K)	295406(K):(GS), (mG)
215409					8	265426			1	295405(N)	
									1	295404(K)	295404(K):(GS), 1Z, AHU
									1	295405(K)	295404(K):(GS), ALE, →576000
									1	295406(K)	295405(K):(ST)
											295406(K):(GS), 1Z, AHU, (mG)
											295406(K):(GS), ALE, →576000, (mG)
215409					8	265426			1	295405(N)	
									1	295404(K)	295404(K):(GS), AFN, →576000
									1	295405(K)	295405(K):(ST)
									1	295406(K)	295406(K):(GS), AFN, →576000, (mG)

					8	265802					
					12	265430			1	295405(N)	
					8	265802					
					8	265802					
					8	265802					265802: B230F
					8	265802					
					16	266502					
					8	265802					265802: B230FT
					16	266502					
					8	265802					265802: B230FT
					8	265430			1	295405(N)	
216577					12	265430			1	295405(N)	
216577					12	265430			1	295405(N)	
					10	266502					
					20	266505					
					10	266502					
					20	266505					
					10	265426					
					8	265802					
					16	266502					
					8	265802					
					8	265430			1	295405(N)	
216577					12	265430			1	295405(N)	
					8	265802					
216577					12	265430			1	295405(N)	
					16	266502					
216577					12	265430			1	295405(N)	

Volvo

		cm³			
960 II					
2.5; 2.9	B6254S; B6304S; (125kW-150kW)	2473-2922	07.94-12.96		
C30					
1.6 D	D4164T; (80kW)	1560	10.06-		
2.0 D	D4204T; (100kW)	1998	10.06-		
2.4 D5	D5244T9; (120kW)	2400	10.06-		
D5	D5244T13; D5244T8; (132kW)	2400	10.06-		
C70 I					
2.0 20V; 2.0 T; 2.3 T5; 2.5; 2.5 T	B5204T2; B5204T3; B5234T3; B5244S; B5244T; B5254S; B5254T; (125kW-176kW)	1984-2435	03.97-10.05		
C70 II					
2.0 D	D4204T; (100kW)	1997	01.08-		
D5	D5244T8; (132kW)	2400	03.06-		
S40 I					
1.6 16V; 1.8 16V	B4164S2; B4184S2; B4184S9; (80kW-90kW)	1587-1783	03.99-12.03		
2.0 T	B4204T; (118kW)	1948	10.97-07.00		
S40 II					
1.6 D	D4164T; (81kW)	1560	01.05-		
2.4	D5244T8; (132kW)	2400	03.06-		
S60					
2.4 D; 2.4 D 5; 2.4 D5	D5244T; D5244T2; D5244T4; D5244T7; (93kW-136kW)	2401	07.01-		
S70					
2.0	B5202S; (93kW)	1984	01.97-11.00		
2.0	B5204T4; (120kW)	1984	01.97-11.00		
2.0 20V; 2.0 20V TURBO; 2.3 20V T-5; 2.3 TURBO	B5204T2; B5204T3; B5234FT+; B5234T3; (132kW-184kW)	1984-2319	01.97-11.00		
2.3	B5234T7; (195kW)	2319	04.99-09.00		
2.5 Bifuel	B5244SG; (103kW)	2435	07.99-11.00		
2.4; 2.4 Bifuel	B5252S; GB5252S; (106kW)	2435	01.97-11.00		
2.4 20V; 2.4 20V TURBO	B5244S; B5244T; B5254S; B5254T; (125kW-142kW)	2435	01.97-11.00		
2.5 TDI	D5252T; (103kW)	2461	01.97-11.00	225702	
S80					
2.0 T	B5204T3; (166kW)	1984	06.98-07.06		
2.8 T6	B6284T; (200kW)	2783	05.98-07.06		
2.9; 3.0	B6294S; B6294S2; (144kW-147kW)	2922	03.99-07.06		
2.9	B6304S3; (150kW)	2922	05.98-07.06		
3.0 T6	B6294T; (200kW)	2922	06.01-07.06		
2.4 D; 2.4 D 5	D5244T; D5244T2; (96kW-120kW)	2401	08.01-07.06		
2.5 TDI	D5252T; (103kW)	2461	01.99-07.06	225702	
S80 II					
2.0 TDi	D4204T; (100kW)	1998	02.08-		
2.4 D; 2.4 D5	D5244T; D5244T4; (120kW-136kW)	2400	03.06-		
2.4 D5	D5244T4; (136kW)	2400	01.07-		
S90					
2.9	B6304S2; (132kW)	2922	01.97-05.98		
V40					
1.6	B4164S2; (80kW)	1587	03.99-06.04		
1.6; 1.8	B4164S; B4184S; B4184S3; (77kW-85kW)	1588-1731	07.95-08.99		
1.8	B4184S2; B4184S9; (90kW)	1783	03.99-06.04		
1.8i	B4184SJ; (90kW)	1834	06.01-06.04		
2.0	B4204S; (100kW)	1948	07.95-06.04		
2.0	B4204S; (103kW)	1948	07.95-08.99		
2.0 T	B4204T; (118kW)	1948	10.97-07.00		
2.0 T	B4204T2; B4204T3; (120kW-121kW)	1948	07.99-06.04		
V50					
1.6 D	D4164T; (81kW)	1560	01.05-		
2.4; 2.4 Tdi	D5244T8; D5244T9; (120kW-132kW)	2400	03.06-		
V70 I					
2.0	B5202S; (93kW)	1984	01.97-03.00		
2.0	B5204T4; (120kW)	1984	01.97-03.00		
2.0 20V; 2.0 TURBO; 2.3 T; 2.3 T-5; 2.3 TURBO	B5204T2; B5204T3; B5234FT+; B5234T3; (132kW-184kW)	1984-2319	01.97-03.00		

RUVILLE YOUR PARTNER

Volvo

					24	266505					
	16	235207			16	268400					
					16	268400					
	20	236501			20	266552					266552: →637638
	20	236500 [6]			20	266555					236500: →637638; 266555: 637639→
	20	236501			20	266552					266552: →637595
	20	236500 [6]			20	266555					236500: →637595; 266555: 637596→
					20	266505					
					16	268400					
	20	236501			20	266552					266552: →637595
	20	236500 [6]			20	266555					236500: →637595; 266555: 637596→
					16	266505					266505: →X
					16	266505					
	16	235207			16	268400					
	20	236501			20	266552					266552: →637638
	20	236500 [6]			20	266555					236500: →637638; 266555: 637639→
	20	236501			20	266552					266552: →637595
	20	236500 [6]			20	266555					236500: →637595; 266555: 637596→
					10	266502					
					20	266505					266505: →X
					20	266505					
					20	266505					266505: →X
					20	266505					
					10	266502					
					20	266505					
215702					10	265426					
					20	266505					
					24	266505					266505:→12.99
					24	266505					
					24	266505					266505:→12.99
					24	266505					
	20	236501			20	266552					
	20	236500 [6]									
215702					10	265426					
					16	268400					
	20	236501			20	266552					266552: →637595
	20	236500 [6]			20	266555					236500: →637595; 266555: 637596→
	20	236501			20	266552					266552: →637638
	20	236500 [6]			20	266555					236500: →637638; 266555: 637639→
					24	266505					
					16	266505					266505: →X
					16	266505					
					16	266505					266505:→12.99
					16	266505					
					16	266505					266505:→12.99
					16	266505					
					16	266505					266505:→12.99
					16	266505					
	16	235207			16	268400					
	20	236501			20	266552					266552: →637638
	20	236500 [6]			20	266555					236500: →637638; 266555: 637639→
					10	266502					
					20	266505					266505: →X
					20	266505					

6 siehe Klappseite vorn • see fold in front.

		cm³			
V70 I					
2.4; 2.5 Bifuel	B5252S; GB5252S; (106kW)	2435	01.97-03.00		
2.4; 2.4 TURBO; 2.5 TURBO	B5244T; B5254S; B5254T; (125kW-142kW)	2435	01.97-05.00		
2.5 TDI	D5252T; (103kW)	2461	01.97-05.00	225702	
V70 II					
2.4 D; 2.4 D5	D5244T; D5244T2; D5244T4; (96kW-136kW)	2401	08.01-		
2.5 TDI	D5252T; (103kW)	2461	03.00-	225702	
V70 III					
1.6 D	(80kW)	1560	01.10-		
2.0 D	D4204T; (100kW)	1997	10.07-		
2.4 D	D5244T5; (120kW)	2400	08.07-		
2.4 D	D5244T14; (129kW)	2400	10.09-		
2.4 D5	D5244T4; (136kW)	2400	08.07-		
V90					
2.9	B6304S2; (132kW)	2922	01.97-12.98		
XC 90					
D5	D5244T5; (120kW)	2400	04.09-		
D5	D5244T; D5244T4; (120kW-136kW)	2401	10.02-		
XC60					
2.4 D	D5244T14; D5244T16; (120kW-129kW)	2400	05.08-		
2.4 D5	D5244T4; (136kW)	2400	05.08-		
D5 AWD	D5244T10; (151kW)	2400	07.09-		
XC70 CROSS COUNTRY					
2.4 D5; 2.5 D5 XC	D5244T; D5244T4; (120kW-136kW)	2401	09.02-		
XC70 II					
2.4 D	D5244T5; (120kW)	2400	08.07-		
2.4 D5	D5244T4; (136kW)	2401	08.07-		

RUVILLE YOUR PARTNER

Volvo

					10	266502					
					20	266505					
215702					10	265426					
	20	236501			20	266552					266552: →637595
	20	236500 [6]			20	266555					236500: →637595; 266555: 637596→
215702					10	265426					
	16	235207			16	268400					
					16	268400					
	20	236501			20	266555					
					20	266555					
	20	236501			20	266552					266552: →637638
	20	236500 [6]			20	266555					236500: →637638; 266555: 637639→
					24	266505					
	20	236501			20	266555					
	20	236501			20	266552					266552: →637595
	20	236500 [6]			20	266555					236500: →637595; 266555: 637596→
	20	236501			20	266555					
	20	236501			20	266555					236501: D5244T5; 266555: D5244T5
	20	236501			20	266555					
	20	236501			20	266552					266552: →637595
	20	236500 [6]			20	266555					236500: →637595; 266555: 637596→
	20	236501			20	266555					
	20	236501			20	266552					266552: →637595
	20	236500 [6]			20	266555					236500: →637595; 266555: 637596→

6 siehe Klappseite vorn • see fold in front.

MAN

		cm³			
D2556 11.4 D		11413	1976-		
D2566 Turbo 6Zyl.	MT/MK/MKF/MKH	11407	1976-		
D2866 6Zyl.	KF/KH/KFZ	11967			
D2866	TOH/TUH/TUM/KU/KUI				
D2866	LFZ/LFZR/LOH/LXOH				
D2866 Turbo	KUH/LU/LUL/LXU				

Mercedes-Benz

1014-1414 6.0 D	OM366; (100kW)	5958	1984-		
1114-1214 6.0 D	OM366/A/LA	5958	1984-1989		
1117-1417 6.0 D	OM366A; (125kW)	5958	1984-		
1122-1422 6.0 D	OM366A; (150kW)	5958	1984-		
1219 - 2419 9.6 D	OM401; (141kW)	9570	1978-		
1222 - 2222 10.9 D	OM421; (159kW)	10964	1984-1989		
1314K - 1414K 6.0 D	OM366/A/LA	5958	1984-1989		
1424 - 1624 12.7 D	OM402	12760	1975-1982		
1614 - 1614K 6.0 D	OM366/A/LA	5958	1984-1989		
1619 - 2419 9.6 D	OM401/A	9570	1974-1979		
1621 - 1622 10.9 D	OM421	10964	1982-1989		
1624B - 2224B 12.7 D	OM402; (235kW)	12760	1978-1982		
1625 14.6 D	OM422; (184kW)	14618	1982-		
1626 - 3026 12.7 D	OM402; (235kW)	12760	1978-1982		
1633 - 1933 14.6 D	OM442A/LA	14618	1979-		
1635 - 2035 14.6 D	OM442A; (353kW)	14618	1986-		
1638 - 1938 14.6 D	OM442A/LA	14618	1979-		
1729 - 2429 15.0 D	OM442; (213kW)	15080	1988-		
1922 - 2222 10.9 D	OM421	10964	1982-1989		
1928 - 3328 14.6 D	OM422; (206kW)	14618	1979-		
2033 - 2233 14.6 D	OM442A/LA	14618	1979-		
2224 12.7 D	OM402	12760	1975-1982		
2235 - 2635 14.6 D	OM442	14618	1986-		
2238 14.6 D	OM442A/LA	14618	1979-		
2421 10.9 D	OM421	10964	1982-1989		
2633 - 3333 14.6 D	OM442A/LA	14618	1979-		
3250 - 3850 18.3 D	OM432A/LA	18273	1979-		
3250 - 4850 18.3 D	OM423A/LA	18273	1979-		
4050 - 4850 18.3 D	OM432A/LA	18273	1979-		
814 - 914 6.0 D	OM366; (100kW)	5958	1984-		
Bus 5.7 D	OM401A; (141kW)	5675	1974-1989		
L1219 - 2419 5.7 D	OM401A; (141kW)	5675	1974-1989		
L608D 3.8 D	OM314; (64kW)	3782	1973-		
LP1626 - LP2226 12.7 D	OM402; (235kW)	12760	1973-1978		
LP709 3.8 D	OM314; (64kW)	3782	1980-1984		
LP808 3.8 D	OM314; (64kW)	3782	1973-		
LP809 3.8 D	OM314; (64kW)	3782	1980-1984		
O-301 Bus 6.0 D	OM366A; (125kW)	5958			
O-303 Bus 10.9 D	OM421; (141kW)	10964	1980-		
O-303 Bus 10.9 D	OM421; (159kW)	10964	1982-		
O-303 Bus 14.6 D	OM422; (184kW)	14618			
O-303 Bus 9.6 D	OM401; (141kW)	9570	1978-1982		
O-303 Bus 9.6 D	OM401/A	9570	1974-1979		
O-305 Bus 11.4 D	OM407; (177kW)	11413	1976-		
O-309D Bus 3.8	OM314; (64kW)	3782	1980-		
	OM364.900/906	3972	1984-		
	OM364.911-914	3972	1984-		
	OM364A/LA Turbo	3972	1984-		
	OM364.901/950	3972	1984-		
	OM364.952/954/957	3972	1984-		
	OM364.981/984/986	3972	1984-		
	OM366.900/905-907	5958	1984-		
	OM366.909/910/914				
	OM366.915/917-919				
	OM366.930-933/936-940				
	OM366.901-904/908				
	OM366.910/913				
	OM366A/LA Turbo	5958	1984-		
	OM366.901/944-949	5958	1984-		
	OM366.951-953	5958	1984-		
	OM366.955-957/962				
	OM366.963/965-974	5958	1984-		
	OM366.976/978-981				
	OM366.983/984/988				

RUVILLE YOUR PARTNER

MAN → Mercedes-Benz

		245155									
						268534					
						268534					
						268534					
						268534					
						268534					

					12	265164					
					12	265164					
					12	265164					
					12	265164					
		245155				265162					mit Spritzversteller
		245155				265162					mit Spritzversteller
					12	265164					
		245155				265162					mit Spritzversteller
					12	265164					
		245155				265162					mit Spritzversteller
		245155				265162					mit Spritzversteller
		245155				265162					mit Spritzversteller
		245155				265162					mit Spritzversteller
		245155				265162					mit Spritzversteller
215154		245155				265162					mit Spritzversteller
		245155				265162					mit Spritzversteller
215154		245155				265162					mit Spritzversteller
215154		245155				265162					mit Spritzversteller
		245155				265162					mit Spritzversteller
		245155				265162					mit Spritzversteller
215154		245155				265162					mit Spritzversteller
		245155				265162					mit Spritzversteller
		245155				265162					mit Spritzversteller
215154		245155				265162					mit Spritzversteller
		245155				265162					mit Spritzversteller
215154		245155				265162					mit Spritzversteller
						265162					
						265162					
						265162					
					12	265164					
		245155				265162					mit Spritzversteller
		245155				265162					mit Spritzversteller
						265164					
		245155				265162					mit Spritzversteller
						265164					
						265164					
						265164					
						265164					
		245155				265162					mit Spritzversteller
		245155				265162					mit Spritzversteller
		245155				265162					mit Spritzversteller
		245155				265162					mit Spritzversteller
		245155				265162					mit Spritzversteller
						265162					
						265164					
						265164					
						265164					
						265164					
						265164					
						265164					
						265164					
						265164					
						265164					
						265164					
						265164					
						265164					
						265164					
						265164					
						265164					
						265164					
						265164					
						265164					
						265164					
						265164					
						265164					
						265164					

RUVILLE
YOUR PARTNER

		cm³			

Mercedes-Benz

	OM366.990/992-997/999				
	OM366.940/980-985				
	OM401 A Turbo	9570	1972-		
	OM401.900/901	9570	1972-		
	OM401.905-909				
	OM401.912-919	9570	1972-		
	OM401.921-928				
	OM402 A Turbo	12760	1972-		
	OM402.900/901	12760	1972-		
	OM402.905-907				
	OM402.910-911	12760	1972-		
	OM401.912-914/916				
	OM401.917/919/921				
	OM401.923-928				
	OM421.900/905-908	10946	1979-		
	OM421.910	10946	1979-		
	OM441.900/905				
	OM441.908/909/911				
	OM441.913-919/923/925				
	OM422.900/905-915	15100	1985-		
	OM422.917-923				
	OM442.900/905-911				
	OM442.914-929				
	OM442.932-935				
	OM422A/LA Turbo	14618	1979-		
	OM442A/LA Turbo	15100	1985-		
	OM422.901/951-959/963				
	OM442.901/941-946				
	OM442.950-955/957-968				

RUVILLE
YOUR PARTNER

Mercedes-Benz

						265164					
						265164					
		245155				265162					mit Spritzversteller
		245155				265162					mit Spritzversteller
		245155				265162					mit Spritzversteller
		245155				265162					mit Spritzversteller
		245155				265162					mit Spritzversteller
		245155				265162					mit Spritzversteller
		245155				265162					mit Spritzversteller
		245155				265162					mit Spritzversteller
		245155				265162					mit Spritzversteller
		245155				265162					mit Spritzversteller
		245155				265162					mit Spritzversteller
		245155				265162					mit Spritzversteller
		245155				265162					-519685, mit Spritzversteller
		245155				265162					-519685, mit Spritzversteller
		245155				265162					-519685, mit Spritzversteller
		245155				265162					-519685, mit Spritzversteller
		245155				265162					-519685, mit Spritzversteller
		245155				265162					mit Spritzversteller
		245155				265162					mit Spritzversteller
		245155				265162					mit Spritzversteller
		245155				265162					mit Spritzversteller
		245155				265162					mit Spritzversteller
215154		245155				265162					mit Spritzversteller
215154		245155				265162					mit Spritzversteller
215154		245155				265162					mit Spritzversteller
215154		245155				265162					mit Spritzversteller
215154		245155				265162					mit Spritzversteller

Alfa Romeo

4152447	265802
46455736	215804
46475925	265809
46787055	265805
55181254	205807
55186463	235302
55200333	235807
55203918	265814
55215616	235801
55230146	235802
60507563	266005
60513940	266001
60513941	266001
60600551	215602
60601213	215603
60610307	215601
60623146	266001
60664980	266005
60810675	266005
71741200	235301
71744383	205301
71749775	266002
71749843	265330
73503122	265805

Audi

022109417C	235701
022109417E	235701
022109423	265165
022109423A	265165
022109423B	265703
022109423C	265703
022109423D	265707
028109101D	215419
028109101G	215419
030109411B	235455
030109423	265402
030109423B	265402
034109309	265426
034109309AD	265426
034109309N	265426
036103085A	295402
036103085H	295403
036109411	235410
036109411C	235410
036109411D	235410
036109411E	235404
036109411G	235404
036109423A	265402
036109423D	265402
038103085A	295401
038103085C	295401
038109101AF	215701
038109101E	215403
038109101K	215402
038109101R	215404
038109309A	265401
038109309B	265401
038109309C	265403
03G109101A	215421
03G109102B	215422
03G109102F	215423
03L109521	265404
03L109521A	265404
045109101C	215406
046109101K	215702
049109101C	215410
050109309A	265427
050109309H	265427
050109309J	265427
056103085B	295405

Audi

056109309A	265430
056109311A	265430
057109521	265716
058109309A	265705
058109309B	265704
058109309E	265705
058109309F	265704
058109309J	265704
058109309K	265705
059109021BP	215407
059109021BQ	215408
059109022BC	215413
059109022BD	215418
059109444	235405
059109521B	265702
059109521C	265702
059109521E	265702
059109521H	265404
068103085A	295405
068103085E	295405
068109101	215420
068109101B	215420
068109101D	215420
068109101L	215480
06B109417C	235409
06B109417D	235409
06E109409A	235703
06E109417	235700
06E109417A	235408
06E109417E	235700
06E109417F	235408
06H109257A	205701
06H109257C	205703
06J109259A	205702
06J109417	235700
074109101E	215702
074109101J	215702
074109309	265426
077109309J	265115
077109417J	245404
077109417K	245405
077109417M	245407
077109417N	245406
079109417	235704

BMW

11121265435	295005
11121285609	295005
11311269497	215019
11311272442	215006
11311275802	215013
11311276441	215029
11311278866	215011
11311287139	215013
11311287606	215014
11311289228	215011
11311706655	215023
11311707151	215026
11311709580	215015
11311716138	215018
11311716139	215024
11311735895	215003
11311738370	215001
11311738371	215004
11311738373	215002
11311739176	215031
11312240863	215013
11312244460	215025
11312244466	215025
11319058572	215011
11321440256	265001

BMW

11321717798	265006
11321727471	265006
11321727993	265006
11321734341	265006
11321739299	265007
11321748880	265010
11321748881	265010
11321748882	265010
11321748884	265010
11327839082	265012
11331247054	265005
11331250080	255010
11331250082	255012
11331250084	255011
11331250086	255013
11331256229	245002
11331264533	255005
11331264549	245006
11331271429	245006
11331271833	245002
11331274929	255012
11331274947	255013
11331274959	255011
11331274963	255010
11331433672	265005
11331707712	265020
11331709063	235001
11331712010	265005
11331714604	265005
11331715458	265005
11331721698	265005
11332247722	265002
11332248878	235003
11332249817	265002
11337512116	265020
11337516948	265004
11337542421	235011
11337546466	265003
11337548690	265003
11337557284	235005
11337559792	235006
11337559793	235007
11337559794	235008
11337559795	235009
11337559796	235010
11337559797	235012
11337583471	265011
11337797710	235004
11337812893	235013
11341401428	265077
11341403859	265088
1247054	265005
1250080	255010
1250082	255012
1250084	255011
1250086	255013
1256229	245002
1264533	255005
1264549	245006
1265435	295005
1269497	215019
1271429	245006
1271833	245002
1272442	215006
1274929	255012
1274947	255013
1274959	255011
1274963	255010
1275802	215013
1276441	215029
1278866	215011

BMW

1285609	295005
1287139	215013
1287606	215014
1289228	215011
1401428	265077
1403859	265088
1433672	265005
1440256	265001
1706655	215023
1707151	215026
1707712	265020
1709063	235001
1709580	215015
1712010	265005
1714604	265005
1715458	265005
1716138	215018
1716139	215024
1717798	265006
1721698	265005
1727471	265006
1727993	265006
1734341	265006
1735895	215003
1738370	215001
1738371	215004
1738373	215002
1739176	215031
1739299	265007
1748880	265010
1748881	265010
1748882	265010
1748884	265010
2240863	215013
2244460	215025
2244466	215025
2247055	265707
2247722	265002
2248878	235003
2249817	265002
7512116	265020
7516948	265004
7542421	235011
7546466	265003
7548690	265003
7557284	235005
7559792	235006
7559793	235007
7559794	235008
7559795	235009
7559796	235010
7559797	235012
7583471	265011
7797710	235004
7805409	265707
7812893	235013
7839082	265012
9058572	215011

Chevrolet

24100294	235301

Chrysler

04792295AB	238600
048840042AA	238601
04884042AA	238601
05080060AB	265140
05175440AA	265165
05175441AA	235118
68027600AA	238604

RUVILLE
YOUR PARTNER

Citroën

023614	295912
023616	295907
023621	295907
023644	295901
0801AH	215918
0801C9	215902
0801CY	215915
0801F5	215904
0801K7	215901
0801K9	215905
0801L2	215903
0801P1	215908
0801P4	215919
0801S1	216616
0801T0	215907
0801T5	215906
0801V8	215801
0801W5	215920
0801Z0	215909
0801Z1	215914
0801Z9	215916
0805F5	205902
080728	295903
090357	245902
090358	235901
090359	235901
090361	235911
090364	235901
090365	235921
090366	235207
090367	235207
090368	235903
0903H0	235908
0903H1	236600
0903H2	235208
0903H3	235006
0903H5	235007
0903H6	235008
0903H7	235009
0903H8	235010
0903J1	235207
0903J2	236602
0903J3	236603
0903J6	235012
0903J7	235803
094217	265970
094225	265907
094226	265906
094228	265898
094232	265904
094233	266600
094234	265901
094235	265950
094240	265950
094241	265910
094245	265950
094246	265903
094247	265901
094248	265903
094250	265905
094253	265165
094255	265911
094286	266602
094287	265008
094288	266601
094289	268400
094293	265912
0942G2	265009
1920GR	205901
259947520	265906
7910006487	295912

Citroën

9151003780	215912
9151343780	265970
9151398380	265970
91515386	215921
9153343780	265970
9154147980	265950
9301337280	265907
93501573	215913
93501758	265960
93510179	215913
94002361	295912
9602710580	265898
96065269	295907
9621252580	265904
9623065180	266600
9624222380	265901
9624222480	265901
9624835280	215906
9634435080	265905
9635323080	265905
9635447280	265901
9636263780	235911
9636848280	235921
9636848480	265165
9636956980	265903
9637858380	265165
9640253580	235207
9640296380	235901
9648659080	235903
9649309780	205901
9649649280	265911
9649649380	265911
9650981280	268400
9650981380	268400
9651263480	235906

Daewoo

17105698	265309
96184997	265309
96376362	265309

Daimler

3520540501	265164
4030540101	265162
4030540201	265162
4030540801	265162
4030540901	265162
4030541801	265162
4220502201	215154

Dodge

68027600AA	238604

Fiat

40004240	295801
4152447	265802
46413078	265801
46448011	265807
46455736	215804
46465330	265801
46475925	265809
46522371	215808
46523711	215802
46765629	265807
46787055	265805
46802420	215809
46815383	265807
46821634	265807
46823507	215807
46823508	215805

Fiat

504367673	235803
55181254	205807
55186463	235302
55190509	205804
55193839	265812
55194046	205803
55200333	235807
55203918	265814
55209166	205801
55209167	205802
55210458	265813
55213710	205806
55215616	235801
55223431	265815
55230146	235802
5942273	265898
60811160	265801
60812654	265801
71744383	205301
73501138	235809
73503122	265805
7545946	295801
7660771	265804
7660772	265806
7723029	215811
7724588	215810
7759619	265801
7796198	265801
9151343780	265970
9153343780	265970
9301337280	265907
9350100480	265901
9400807289	295903
9441003680	245902
9603104288	215910
9609878688	215904
9623446280	235901
9624835280	215906
9633089580	265910
9634435080	265905
9636956980	265903
9640253580	235207
9640296380	235901
9650981280	268400
9653928680	236600
9659189980	266602
9660132280	235208
98427674	215801

Ford

1003734	265205
1004302	295202
1004442	265203
1004443	265203
1007308	265205
1018144	265272
1025372	235205
1025392	265285
1032523	295405
1037330	265205
1037331	265205
1039238	265208
1041776	215201
1041777	215204
1043175	265205
1047213	265230
1089827	235206
1089828	265281
1099936	245233
1100013	245232
1100677	265401

Ford

1118063	235701
1118064	265165
1120750	245231
1120752	245230
1145958	235921
1146061	265165
1212979	265165
1212979	265703
1231272	235207
1313804	215916
1313805	215918
1319249	268400
1386533	215915
1425513	235208
1426035	265403
1450602	236600
1450604	266602
1459459	235209
1475650	265208
1478181	206502
1478182	206503
1487788	265165
1506018	215212
1538733	265809
1539543	235809
1584660	215218
1614766	215208
1614767	215210
1651585	215205
1662935	265208
1663822	295201
1669254	295225
1669840	295405
1683702	236603
1684538	236602
1M216500AA	265703
2S6Q6250AD	215915
2S6Q6500AA	265165
2S6Q6500AB	265165
2S6Q6564AA	235921
3M5Q6500BA	268400
3M5Q6564AA	235207
3M5Q6A270AC	215916
3M5Q6A273AC	215918
4121218	235205
4R8Q6G093AA	235908
4S7Q6529AA	235202
4S7Q6C501AA	265165
6029395	215202
6062844	215212
6062845	235204
6078801	295218
6111580	265230
6116549	215224
6135090	295250
6136467	265230
6136468	265230
6165214	215230
6165215	215201
6165498	295225
6165500	295244
6173095	215214
6179242	215203
6181794	265230
6184939	265280
6186554	215210
6388846	265202
6431447	265255
6515482	265280
6538976	215205
6542372	265206

Ford

6560152	265272
6568098	265280
6723376	295225
6754268	265202
6783246	265205
6783247	265205
6804674	265205
6834352	265280
6834354	265280
6902034	265205
6945586	265205
6957756	265230
6C1Q6K551BA	235208
6G9Q6564BA	236600
6M5G6L713AB	206502
6M5G6L713BB	206503
711F6500CA	265208
7273171	265280
77BM6250BA	215202
78HM6250AA	215212
78HM6250BA	215218
78HM6564AA	235204
7C166K551AB	235209
81SM6251KE	215208
81SM6251LE	215210
83HM6700AA	295218
83TM6250CA	215224
84FM6500B1B	265230
84FM6500B2B	265230
84FM6500BB	265230
84FM6L270A1A	295250
86HF6500AA	265426
86HF6500AB	265426
86HM6700A6A	295225
86HM6700AA	295225
86SM6700A6A	295244
88SM6251CA	215210
88WM6500A1G	265280
88WM6500A1H	265280
88WM6500A1J	265280
88WM6500A3G	265280
88WM6500A3H	265280
89BM6251AA	215230
89BM6251BA	215201
89BM6500AB	265208
89FF6250AA	215214
89FF6500AA	265230
89FM6500AA	265230
89SM6251BB	215203
90TM6500AF	265255
91XM6500CA	265272
928M6K292B5A	295201
92TM6700A1A	295225
938M6500A1B	265205
938M6500A1C	265205
938M6500A1D	265205
938M6500A1E	265205
938M6500A2D	265205
938M6500A2E	265205
938M6500A2F	265205
938M6500B1B	265205
938M6500B2A	265205
938M6550A1E	265205
93FF6500AA	265230
93FF6500AB	265230
95BM6500A1B	265208
95VW6500BA	265426
95VW6700BA	295405
95VW6700DA	295405
96MM6500A1C	265203
96MM6500A2C	265203

Ford

96MM6K292A2A	295202
96XM6500AA	265272
97BM6251BA	215201
97BM6251CA	215204
97JM6529AB	235205
97JM6C501AB	265285
9M5Q6564AA	236603
9M5Q6576AA	236602
9S516500BA	265809
9S516564AA	235809
E7EE6251DC	215205
E9EE6500A2A	265202
E9RE6251AA	215205
F2CE6500A2B	265202
F5RZ6500BA	265205
V90HF6500AA	265206
XM216500AA	265401
XM216500BA	265403
XS6E6529AB	235206
XS6E6C501AC	265281
XS7Q6529A1C	245231
XS7Q6K528A1C	245230
YC1Q6529A1D	245233
YC1Q6K528A1D	245232
YL2E6529AA	235205
YM216529AA	235701

GM

05233315	265306
12572638	265330
12584326	266002
12992409	205302
12992410	205303
24100005	265330
24100294	235301
24401409	215307
55567048	205303
55567049	205302
90076745	275307
90128143	235320
90144437	215340
90156007	295310
90156786	215329
90169285	275307
90190180	215330
90190883	215332
90190887	215325
90190932	215325
90190948	215332
90271486	215323
90273368	215360
90273814	215315
90273974	215340
90281484	215315
90281528	215315
90284704	215360
90284843	215340
90285226	215330
90285234	215330
90285291	295310
90295035	215330
90295037	215330
90295039	215318
90295041	215318
90295202	215320
90295203	215320
90295215	265306
90297711	215313
90299177	215397
90323514	235320
90324449	265302

GM

90324522	215313
90324593	215301
90348251	215333
90348252	215334
90348473	265302
90349705	215301
90353157	265312
90392539	215354
90398840	235340
90421795	265306
90421983	215352
90443882	215303
90444139	215355
90444758	215398
90444760	215354
90486628	215306
90486843	265302
90486863	265302
90486981	215304
90501024	265302
90502282	235320
90502514	265302
90509386	265007
90510511	265302
90511241	265302
90529534	265301
90530506	265312
90542632	265301
90542783	265302
90570967	265302
91160200	235501
9117903	265302
9117904	265302
9117905	265302
9120253	215305
9128603	265301
9129211	235356
9194698	265330
93160083	265503
93161686	265165
93161687	235502
93171485	265002
93171486	235003
93177316	265809
93178546	265802
93188668	235807
93361391	265285
94381712	215302
96440191	235303
96440192	235304
97042660	215302
97111166	215309
97111168	215308

Honda

14540RBDE01	267400
14621RBDE01	237400
14621RL0G01	237401

Hyundai

13230AA110	267000
222314A000	266552
222314A001	268400
2410022012	216200
2410027500	216202
2410042500	216201
241702A000	238401
241703A000	238403
241704A002	238404
241804A000	238400
241804A001	238400

Hyundai

2455103000	238402
2461003000	265165
662872	217301

Isuzu

8970107270	267000
8971852510	265307

Iveco (Fiat - OM)

504367673	235803
504380370	235803

Jaguar

4R8Q6G093AA	235908
NBC2543AA	268300

Jeep

68027600AA	238604

Kia

0K20312101A	267005
0K24712101	267005
0K55112100	268901
0K95K12101A	268902
222314A000	266552
241702A000	238401
241704A002	238404
2455103000	238402
K93812101A	267005

Lada

21010100601500	217202

Lancia

4152447	265802
46448011	265807
46455736	215804
46475925	265809
46522371	215808
46765629	265807
46772393	216000
46787055	265805
46802420	215809
46815383	265807
46821634	265807
46823507	215807
46823508	215805
55186463	235302
55190509	205804
55193839	265812
55200333	235807
55223431	265815
5942273	265898
60507563	266005
60664980	266005
60810675	266005
73501138	235809
73503122	265805
7723029	215811
7724588	215810
9151343780	265970
9153343780	265970
9301337280	265907
9350100480	265901
9400807289	295903
9609878688	215904
9623446280	235901
9634435080	265905
9636956980	265903

RUVILLE
YOUR PARTNER

Lancia

9640296380	235901

Land Rover

1336545	235908
ERR7233	265103
ERR7234	238000
LGR100480L	265002
LR004167	236600
LR004168	266602
LR004443	235208
LXC000010L	235003

Lexus

1375150031	269600

MAN

51043010065	268534
51043010068	268534

Mazda

FS1212101	267001
JFY112100	267000
KL3112101	267002
Y40112101A	265165
Y40112130	235921

Mercedes-Benz

0000540201	265426
1020500133	245104
1020500201	215108
1020500633	245104
1020501301	215168
1020502501	215109
1020503101	215109
1020504501	215109
1020504801	215109
1020505501	215109
1020540101	265115
1020540201	265115
1020550001	245106
1020550301	245104
1020550501	245104
1030500080	265113
1030500201	245108
1030500233	245108
1030500633	245108
1030501033	245108
1030502201	215110
1030502701	215110
1030505101	215110
1030506001	215110
1030506401	215110
1030550676	265131
1030550776	265134
1030550976	265130
1040501225	265150
1040507401	215101
1040508501	215102
1100517401	215180
1100517801	215181
1100550601	235110
1100550901	235110
1110501801	215160
1110501901	215161
1110502101	215162
1130500033	245110
1130500034	245112
1130500080	265102
1130500133	245111
1130500280	265104

Mercedes-Benz

1130500380	265104
1130500534	245112
1150510501	215171
1160500180	265119
1160500480	265119
1160516201	215186
1160516301	215187
1160517001	215188
1160517101	215189
1160551101	235116
1160551501	235116
1170510001	215192
1170510101	215193
1170510801	215194
1170510901	215195
1170512001	215198
1170512101	215199
1170512601	215196
1170512701	215197
1560500225	265108
1600500180	265165
1660500080	265102
2710500333	235103
2710500533	235103
2720500033	235117
2720500233	235105
2720500333	235108
2720500380	265109
2760500033	235107
4030500733	245155
4420500333	245155
6010500080	265118
6010500325	265118
6010500380	265118
6010500401	215113
6010500425	265118
6010500501	215113
6010500525	265118
6010500725	265118
6010500801	215113
6010500825	265118
6010501101	215107
6020500501	215111
6020500801	215111
6020501301	215114
6030500301	215112
6030500401	215112
6030500701	215112
6110500025	265140
6110500225	265140
6110500801	215115
6150500133	245103
6150500333	245103
6150500433	245103
6150550201	245103
6160510201	215104
6160510601	215104
6160550005	255108
6170510501	215103
6170511101	215103
6210511801	215104
6420500080	265165
6420500133	235118
6510500033	235106
6510500080	265110
6600500133	238701
6680500080	265103
6680500180	265106
6680500233	235102
6680500433	235102

Mercedes-Benz

6680500533	235102

Mini

11337549632	265008
11337549633	265009
11337805973	235207
11337805974	268400
7549632	265008
7549633	265009
7805973	235207
7805974	268400

Mitsubishi

MD050140	217301
MD072177	267303
MD149309	267302
MD151382	267303
MD171130	267300
MD182737	217302
MD302333	217303
MD337687	267302
MD339767	267303
MD376687	267300
MD377054	267302
MD377560	267303
MN960096	235118
MN960097	265165

Nissan

130202J200	216803
130202J210	216802
1302061J10	216800
1302073C00	216801
1323100QAA	265503
1323143G00	266807
132314F100	266801
1323153Y01	266803
1323154T02	266808
1323179S00	266804
13231AD201	266809
13231V5004	266802
13231V5005	266802
13231V5014	266802
1323400Q0A	265165
1325700Q0A	235502
1325700QAB	235501
1325740F06	246800
1325740F07	246801
1325740F16	246802
1325740F17	246803

Opel

05233315	265306
1235299	205805
12992408	205301
12992409	205302
12992410	205303
17123524	265330
24100005	265330
24100294	235301
24401409	215307
4409128	235501
4409839	265503
4431246	265165
4431247	235502
4814153	235303
4814154	235304
5231970	266140
5232245	266140
55186463	235302

Opel

55567048	205303
55567049	205302
55567050	205805
5636002	215025
5636011	215310
5636012	215311
5636013	215335
5636014	215331
5636466	205302
5636467	205303
5636631	205303
5636632	205302
5640018	265802
5640577	235356
5640581	235003
5640587	235809
5640591	235807
6235597	205301
636000	215320
636001	215355
636002	215320
636004	215301
636005	215397
636006	215305
636009	215302
636010	215354
636011	215398
636014	215354
636024	215321
636027	215309
636028	215308
636039	215336
636040	215337
636041	215307
636044	215340
636053	215320
636056	215301
636062	215329
636065	215330
636070	215325
636073	215325
636079	215332
636080	215332
636117	215399
636119	215323
636121	215360
636125	215315
636126	215315
636127	215340
636129	215330
636131	215315
636132	215330
636135	215318
636136	215318
636141	215323
636143	215316
636144	215333
636145	215334
636149	215313
636181	215314
636186	215352
636197	215303
636198	215302
636202	215398
636203	215312
636205	215306
636207	215304
636838	295310
636839	295340
636841	295310
640000	265302

Opel

640001	**265007**
640003	**265302**
640004	**265302**
640005	**265312**
640007	**265301**
640008	**265302**
640009	**265302**
640010	**265302**
640013	**265301**
640015	**265307**
640016	**265330**
640020	**265302**
640025	**235356**
640039	**265809**
640041	**235301**
640051	**265306**
640056	**265302**
640057	**265302**
640058	**265312**
640059	**265306**
640066	**265301**
640067	**265302**
640068	**235356**
640259	**235302**
640520	**265302**
640521	**265302**
640522	**265002**
640577	**235340**
640579	**235320**
640580	**235340**
640581	**235340**
640582	**235320**
640587	**235320**
640588	**235320**
640766	**275307**
640768	**275307**
90076745	**275307**
90128143	**235320**
90144437	**215340**
90156007	**295310**
90156786	**215329**
90169285	**275307**
90190883	**215332**
90190887	**215325**
90190932	**215325**
90190948	**215332**
90271484	**215399**
90271486	**215323**
90273368	**215360**
90273814	**215315**
90273974	**215340**
90281484	**215315**
90281528	**215315**
90284704	**215360**
90284843	**215340**
90285291	**295310**
90295039	**215318**
90295041	**215318**
90295202	**215320**
90295203	**215320**
90295215	**265306**
90297711	**215313**
90299177	**215397**
90323514	**235320**
90324449	**265302**
90324522	**215313**
90324593	**215301**
90348251	**215333**
90348252	**215334**
90348473	**265302**
90349705	**215301**

Opel

90353157	**265312**
90392539	**215354**
90398840	**235340**
90421795	**265306**
90421983	**215352**
90443882	**215303**
90444139	**215355**
90444332	**215314**
90444758	**215398**
90444759	**215312**
90444760	**215354**
90486628	**215306**
90486843	**265302**
90486863	**265302**
90486981	**215304**
90501024	**265302**
90502282	**235320**
90502514	**265302**
90509383	**215025**
90509386	**265007**
90510511	**265302**
90511241	**265302**
90512899	**215310**
90512904	**215311**
90529534	**265301**
90529535	**235356**
90530506	**265312**
90542632	**265301**
90542783	**265302**
90570967	**265302**
91160200	**235501**
9117903	**265302**
9117904	**265302**
9117905	**265302**
9120166	**215355**
9120253	**215305**
9120518	**215321**
9128346	**235356**
9128603	**265301**
9129211	**235356**
9158623	**215336**
9158629	**215337**
9194698	**265330**
93160083	**265503**
93161686	**265165**
93161687	**235502**
93171485	**265002**
93171486	**235003**
93177315	**235809**
93177316	**265809**
93178546	**265802**
93188668	**235807**
94381712	**215302**
96440191	**235303**
96440192	**235304**
97042660	**215302**
97111166	**215309**
97111168	**215308**
97185251	**265307**

Peugeot

023644	**295901**
051415	**295912**
080152	**215912**
080155	**215913**
080189	**215921**
0801AH	**215918**
0801C2	**215913**
0801C9	**215902**
0801CY	**215915**
0801E8	**215910**

Peugeot

0801F5	**215904**
0801K7	**215901**
0801K9	**215905**
0801L2	**215903**
0801P1	**215908**
0801P4	**215919**
0801T0	**215907**
0801T5	**215906**
0801V8	**215801**
0801W5	**215920**
0801Z0	**215909**
0801Z1	**215914**
0801Z9	**215916**
0805F5	**205902**
080724	**295902**
080728	**295903**
090357	**245902**
090358	**235901**
090359	**235901**
090361	**235911**
090364	**235901**
090365	**235921**
090366	**235207**
090367	**235207**
090368	**235903**
0903H0	**235908**
0903H1	**236600**
0903H2	**235208**
0903H3	**235006**
0903H5	**235007**
0903H6	**235008**
0903H7	**235009**
0903H8	**235010**
0903J1	**235207**
0903J2	**236602**
0903J3	**236603**
0903J6	**235012**
0903J7	**235803**
094216	**265960**
094217	**265970**
094225	**265907**
094226	**265906**
094228	**265898**
094232	**265904**
094233	**266600**
094234	**265901**
094235	**265950**
094240	**265950**
094241	**265910**
094242	**265165**
094245	**265950**
094246	**265903**
094247	**265901**
094248	**265903**
094250	**265905**
094251	**265165**
094252	**265165**
094253	**265165**
094255	**265911**
094286	**266602**
094287	**265008**
094288	**266601**
094289	**268400**
094293	**265912**
0942G2	**265009**
1920GR	**205901**
259947520	**265906**
9151343780	**265970**
9151398380	**265970**
9153343780	**265970**
9154147980	**265950**

Peugeot

9301337280	**265907**
9350175880	**265960**
9602710580	**265898**
9621252580	**265904**
9623065180	**266600**
9624222380	**265901**
9624222480	**265901**
9624835280	**215906**
9634435080	**265905**
9635323080	**265905**
9635447280	**265901**
9636263780	**235911**
9636848280	**235921**
9636848480	**265165**
9636956980	**265903**
9640253580	**235207**
9640296380	**235901**
9646210780	**266552**
9648659080	**235903**
9649309780	**205901**
9649649280	**265911**
9649649380	**265911**
9650981280	**268400**
9650981380	**268400**
9651263480	**235906**

Porsche

92810531200	**266705**
92810531202	**266705**
99310514103	**266710**
99310514105	**266715**
99610504150	**265010**
99610504172	**268902**
99610504173	**266703**
99610504191	**266703**

Proton

PW811086	**265309**
PW881557	**265309**

Renault

7439207830	**266505**
7700101020	**215503**
7700106359	**215509**
7700107373	**215506**
7700107555	**265503**
7700107556	**235501**
7700260235	**265906**
7700272940	**215507**
7700471376	**295501**
7700699231	**215542**
7700742906	**215519**
7700744596	**265501**
7700858606	**265907**
7700862076	**215501**
7700862077	**215519**
7700862078	**215520**
7700866151	**266401**
7700866418	**215504**
7700872299	**215502**
7701062311	**235502**
7701062312	**265165**
7701071145	**265716**
7946006610	**245535**
7956009814	**215912**
8200043152	**215508**
8200115605	**235501**
9635323080	**265905**
9635447280	**265901**

RUVILLE
YOUR PARTNER

Rover

ADU9130	266401
ERC4949	266140
ERR7233	265165
LGR10002	265805
LGR100100	265805
LGR100480	265002
LXC000010	235003
LXC100090	235003

Saab

24100294	235301
4621298	265309
4726865	265309
4770301	265309
55557388	266402
9134420	266401
9169566	266402
9186073	266402
9194698	265330
93177316	265809
93178546	265802
93191376	235302
9357716	266401

Seat

022109417C	235701
022109417E	235701
022109423B	265703
022109423C	265703
022109423D	265707
028109101D	215419
028109101G	215419
030109411	235455
030109411B	235455
030109417B	235455
030109423	265402
030109423B	265402
036103085A	295402
036103085H	295403
036109309D	265416
036109309F	265416
036109411	235410
036109411C	235410
036109411D	235410
036109411E	235404
036109423A	265402
036109423D	265402
038103085A	295401
038103085C	295401
038109101E	215403
038109101R	215404
038109309A	265401
038109309B	265401
038109309C	265403
03G109101A	215421
03G109102B	215422
03G109102F	215423
045109101C	215406
056103085B	295405
058109309E	265705
068103085A	295405
068103085E	295405
06E109417A	235408
06E109417F	235408
SE021012101A	265426
SE201012101A	265802

Skoda

022109423D	265707
028109101D	215419
028109101G	215419

Skoda

030109411	235455
030109417B	235455
030109423	265402
030109423B	265402
036103085A	295402
036103085H	295403
036109411	235410
036109411C	235410
036109411D	235410
036109411E	235404
036109423A	265402
036109423D	265402
038103085A	295401
038103085C	295401
038109101E	215403
038109101R	215404
038109309A	265401
038109309B	265401
038109309C	265403
03G109101A	215421
03G109102B	215422
03G109102F	215423
045109101C	215406
056103085B	295405
058109309A	265705
058109309E	265705
059109021BP	215407
059109021BQ	215408
059109022BC	215413
059109022BD	215418
059109444	235405
068103085A	295405
068103085E	295405
06E109417A	235408
06E109417F	235408
06J109423	265165
06J109423A	265707

Smart (MCC)

0003066V003000000	265165
0004571V003000000	238701
0004572V001000000	265103
6420500080	265165
6420500133	235118

Ssangyong

6650500025	265165
6650500030	239100
6650500130	239100
6650501025	268400

Subaru

13230AA153	267002

Suzuki

1284067G10000	235901
1284078J00000	235301
1284079J80000	235302
1284085E00000	235809
12840N86J00000	235809
1284173J01000	235207
12850N86J00000	265809
1286078J00000	265330
1289167G01000	265165
1289179J50000	265802
1289185E00000	265809

Talbot

9350140980	295912

Toyota

137500R010	266911
137500R020	266911
137500T010	266908
1375070010	266900
1375071010	266902
1375071020	266902
1375075020	266909
1375102020	266901
1375116010	266903
1375131020	266904
1375144030	266904
1375147011	266904
1375150030	269600
1375150031	269600
1375161010	266905
1375161020	266906
1375164011	266907
1375174020	266901
138010R010	236901
1380123011	236900
1380133020	236902

Vauxhall

05233315	265306
12992409	205302
12992410	205303
17123524	265330
24100005	265330
24100294	235301
24401409	215307
4409128	235501
4409839	265503
4431246	265165
4431247	235502
4814153	235303
4814154	235304
55186463	235302
55567048	205303
55567049	205302
5636002	215025
5636011	215310
5636012	215311
5636013	215335
5636014	215331
5636466	205302
5636467	205303
5636631	205303
5636632	205302
5640018	265802
5640577	235356
5640581	235003
5640591	235807
636006	215305
636024	215321
636027	215309
636028	215308
636039	215336
636040	215337
636041	215307
636181	215314
636203	215312
636205	215306
636207	215304
640013	265301
640016	265330
640025	235356
640039	265809
640041	235301
640068	235356
640259	235302
640522	265002

Vauxhall

90076745	275307
90128143	235320
90144437	215340
90156007	295310
90156786	215329
90169285	275307
90190180	215330
90190883	215332
90190887	215325
90190932	215325
90190948	215332
90271486	215323
90273368	215360
90273814	215315
90273974	215340
90281484	215315
90281528	215315
90284704	215360
90284843	215340
90285226	215330
90285234	215330
90285291	295310
90295035	215330
90295037	215330
90295039	215318
90295041	215318
90295202	215320
90295203	215320
90295215	265306
90297711	215313
90299177	215397
90323514	235320
90324449	265302
90324522	215313
90324593	215301
90348251	215333
90348252	215334
90348473	265302
90349705	215301
90353157	265312
90392539	215354
90398840	235340
90421795	265306
90421983	215352
90443882	215303
90444139	215355
90444332	215314
90444758	215398
90444759	215312
90444760	215354
90486628	215306
90486843	265302
90486863	265302
90486981	215304
90501024	265302
90502282	235320
90502514	265302
90509383	215025
90509386	265007
90510511	265302
90511241	265302
90512899	215310
90512904	215311
90529534	265301
90529535	235356
90530506	265312
90542632	265301
90542783	265302
90570967	265302
91160200	235501
9117903	265302

Vauxhall

9117904	**265302**
9117905	**265302**
9120253	**215305**
9120518	**215321**
9128346	**235356**
9128603	**265301**
9129211	**235356**
9158623	**215336**
9158629	**215337**
9194698	**265330**
93160083	**265503**
93161686	**265165**
93161687	**235502**
93171485	**265002**
93171486	**235003**
93177316	**265809**
93178546	**265802**
93188668	**235807**
94381712	**215302**
96440191	**235303**
96440192	**235304**
97042660	**215302**
97111166	**215309**
97111168	**215308**

VM

30412002F	**238604**

Volkswagen

022109417C	**235701**
022109417E	**235701**
022109423	**265165**
022109423A	**265165**
022109423B	**265703**
022109423C	**265703**
022109423D	**265707**
023109101E	**215428**
026109101M	**215425**
028109101D	**215419**
028109101E	**215411**
028109101F	**215409**
028109101G	**215419**
030109411	**235455**
030109411B	**235455**
030109417B	**235455**
030109423	**265402**
030109423B	**265402**
033109101	**215417**
034109309	**265426**
034109309AD	**265426**
034109309N	**265426**
036103085A	**295402**
036103085H	**295403**
036109309D	**265416**
036109309F	**265416**
036109411	**235410**
036109411C	**235410**
036109411D	**235410**
036109411E	**235404**
036109411G	**235404**
036109423A	**265402**
036109423D	**265402**
038103085A	**295401**
038103085C	**295401**
038109101AE	**215429**
038109101AF	**215701**
038109101E	**215403**
038109101R	**215404**
038109309A	**265401**
038109309B	**265401**
038109309C	**265403**

Volkswagen

03G109101A	**215421**
03G109102B	**215422**
03G109102C	**215432**
03G109102F	**215423**
03L109521	**265404**
03L109521A	**265404**
045109101C	**215406**
049109101C	**215410**
050109101A	**215424**
050109309A	**265427**
050109309H	**265427**
050109309J	**265427**
056103085B	**295405**
056109309A	**265430**
056109311A	**265430**
057109521	**265716**
058109309A	**265705**
058109309B	**265704**
058109309E	**265705**
058109309F	**265704**
058109309J	**265704**
058109309K	**265705**
059109021BP	**215407**
059109021BQ	**215408**
059109022BC	**215413**
059109022BD	**215418**
059109417G	**235406**
059109444	**235405**
059109521B	**265702**
059109521C	**265702**
059109521E	**265702**
059109521H	**265404**
068103051P	**295404**
068103085A	**295405**
068103085E	**295405**
068103171G	**295406**
068109101	**215420**
068109101B	**215420**
068109101D	**215420**
068109101L	**215480**
069109101P	**215415**
06B109417C	**235409**
06B109417D	**235409**
06E109417A	**235408**
06E109417E	**235700**
06E109417F	**235408**
06E109417H	**235411**
06H109257A	**205701**
06H109257C	**205703**
06J109259A	**205702**
070109101P	**215405**
070109101Q	**215431**
074109101A	**215414**
074109101B	**215415**
074109309	**265426**
075109101	**215499**
075109101A	**215499**
075109101C	**215498**
077109417J	**245404**
077109417K	**245405**
07P109417	**235407**

Volvo

12570594	**265430**
1275353	**266505**
1317798	**266502**
1328149	**216577**
1366842	**266505**
30646225	**206506**
30646226	**206505**
30711499	**268400**

Volvo

30711504	**235207**
31216221	**206502**
31216222	**206503**
31251885	**266555**
6900192	**235202**
8670045	**236501**
8670047	**266552**
9180681	**266502**
9207830	**266505**

RUVILLE
YOUR PARTNER

INA F- Ref.		INA F- Ref.		INA F- Ref.		INA F- Ref.	
F-347558	205801	F-446133.01	235117	F-46214.9	265102	F-346956.3	245232
F-347558.01	205801	F-446133.1	235117	F-46214-281	265806	F-346956.50	245232
F-347558.10	205802	F-446152.02	237400	F-46217-281	265806	F-346957.03	245233
F-347558.11	205802	F-446152.06	237401	F-46301	265119	F-346957.3	245233
F-390039	238600	F-446152.2	237400	F-46301.05	265119	F-346957.50	245233
F-446000.12	235900	F-446169.05	235502	F-46301.5	265119	F-346958.03	245230
F-446007.11	235004	F-446189.01	235404	F-46313.25	265005	F-346958.3	245230
F-446007.17	235013	F-446189.1	235404	F-46313.27	265005	F-346958.50	245230
F-446007.5	235003	F-446192.01	235118	F-46315.05	265907	F-346959.03	245231
F-446007.50	235003	F-446192.05	235118	F-46315.07	265907	F-346959.3	245231
F-446009.01	235206	F-446200.16	235703	F-46315.5	265907	F-346959.50	245231
F-446009.1	235206	F-446202.06	235208	F-46315.7	265907	F-346973.16	235911
F-446009.50	235206	F-446211.08	235106	F-46318.08	265301	F-346973.17	235901
F-446035.08	235302	F-446231.12	235107	F-46318.11	265009	F-346973.50	235901
F-446035.09	235807	F-446245.01	238402	F-46318.13	265301	F-346973.51	235911
F-446037.03	235202	F-446263.02	235209	F-46318.19	265503	F-346973.61	235901
F-446037.09	236501	F-446298.18	235105	F-46318.24	265103	F-346981.2	235455
F-446037.3	235202	F-446298.19	235108	F-46318.25	265002	F-346981.50	235455
F-446037.50	236501	F-446305.02	235005	F-46318.28	265330	F-346983.07	245902
F-446037.9	236501	F-446307.09	235802	F-46318.29	265002	F-346983.7	245902
F-446040.03	235908	F-446331.03	235406	F-46318.35	265301	F-346986.11	245404
F-446040.3	235908	F-446601.01	235000	F-46318.36	265702	F-346986.12	245404
F-446049.05	235809	F-446601.1	235000	F-46318.37	265165	F-346987.11	245405
F-446049.5	235809	F-446603.01	235201	F-46318.38	265716	F-346987.12	245405
F-446050.02	238701	F-446603.02	235200	F-46318.40	265020	F-347135.03	206502
F-446050.2	238701	F-446603.1	235201	F-46318.42	265702	F-347136.03	206503
F-446050.50	238701	F-446603.2	235200	F-46318.43	265707	F-347161.04	205902
F-446055.01	245406	F-446609.01	238700	F-46318.44	265002	F-347194	206505
F-446055.02	245406	F-446609.02	235100	F-346510.01	265309	F-347196	206506
F-446055.1	245406	F-446609.1	238700	F-346510.07	265309	F-347216.02	205807
F-446055.2	245406	F-446609.2	235100	F-346510.08	265901	F-347218.06	205803
F-446056	245407	F-446612.01	235300	F-346510.1	265309	F-347234.03	205901
F-446056.01	245407	F-446612.1	235300	F-346510.14	266505	F-347241.03	205804
F-446056.1	245407	F-446613.01	235900	F-346510.15	265950	F-347351.10	205303
F-446062.02	235921	F-446613.02	235910	F-346510.16	265309	F-347351.20	205303
F-446062.04	235903	F-446613.03	235920	F-346510.21	265901	F-347352.10	205302
F-446062.05	235902	F-446613.05	235902	F-346510.22	265950	F-347352.20	205302
F-446062.2	235921	F-446613.1	235900	F-346510.23	266505	F-347377.03	205301
F-446062.4	235903	F-446613.2	235910	F-346510.24	265302	F-347392.03	205701
F-446062.5	235902	F-446613.3	235920	F-346510.28	265950	F-347392.09	205703
F-446062.50	235921	F-446613.5	235902	F-346510.7	265309	F-347398.21	205702
F-446065.10	235408	F-446615.01	235500	F-346510.8	265901	F-347537.04	205806
F-446065.11	235700	F-446615.1	235500	F-346511.02	265272	F-347555.01	205805
F-446065.17	235704	F-446616.01	238001	F-346511.10	267200	F-46318.45	265002
F-446065.21	235700	F-446616.1	238001	F-346511.2	265272	F-46318.47	265402
F-446065.35	235411	F-446621.01	236500	F-346514.07	266402	F-46318.49	265106
F-446067.06	238403	F-446621.1	236500	F-346514.10	266402	F-46318.50	265103
F-446072.10	238400	F-446622.01	235402	F-346514.12	265140	F-46318.51	265503
F-446072.11	238400	F-446622.02	235400	F-346514.3	266402	F-46318.52	265703
F-446073.05	238404	F-446622.03	235453	F-346514.7	266402	F-46318.54	265702
F-446074.03	235409	F-446622.1	235402	F-346515	265150	F-46318.55	265004
F-446074.05	235409	F-446622.2	235400	F-346526.13	265012	F-46318.60	266552
F-446074.07	235801	F-446622.3	235453	F-346600.08	265203	F-46318.62	265402
F-446074.3	235409	F-46207.02	265113	F-346600.8	265203	F-46318.64	265703
F-446074.5	235409	F-46207.03	265113	F-346626	265088	F-46318.73	265809
F-446074.50	235409	F-46207.181	265134	F-346629.01	265307	F-46318.77	268400
F-446080.01	235207	F-46207.2	265113	F-346629.1	265307	F-46318.8	265301
F-446080.1	235207	F-46207.3	265113	F-346912.15	245112	F-46318.86	265009
F-446080.60	235207	F-46207.81.06	265131	F-346912.16	245110	F-46318.87	267400
F-446090.04	239100	F-46207.81.09	265130	F-346912.17	245111	F-46318.90	265110
F-446103.10	235303	F-46209.08	265906	F-346912.29	245112	F-46318.91	265003
F-446104.10	235304	F-46209.8	265906	F-346912.34	245112	F-46318.95	266002
F-446105.08	238401	F-46214.02	265804	F-346912.35	245110	F-46320.04	265285
F-446106.02	235701	F-46214.05	266710	F-346912.36	245111	F-46320.12	265285
F-446106.07	235407	F-46214.09	265102	F-346920.50	238000	F-46320.4	265285
F-446106.2	235701	F-46214.12	265102	F-346920.6	238000	F-46325.01	265281
F-446122.13.SLH#N	235011	F-46214.15	268901	F-346945.07	235356	F-46325.1	265281
F-446122.13.SLH-GR1#N	235006	F-46214.16	266715	F-346945.50	235356	F-46327	265165
F-446122.13.SLH-GR1-6#	235012	F-46214.2	265804	F-346945.7	235356	F-46327.01	265716
F-446122.13.SLH-GR2#N	235007	F-46214.23	265104	F-346950.13	235410	F-46327.02	265020
F-446122.13.SLH-GR3#N	235008	F-46214.29	268901	F-346950.5	235410	F-46327.03	265281
F-446122.13.SLH-GR4#N	235009	F-46214.5	266710	F-346950.50	235410	F-46327.04	265716
F-446122.13.SLH-GR5#N	235010	F-46214.81	265806	F-346956.03	245232	F-46327.05	265106

INA F- Ref.		INA F- Ref.		INA F- Ref.		INA F- Ref.	
F-46327.08	**265004**	F-46577.15	**265010**				
F-46327.09	**266552**	F-46577.16	**265010**				
F-46327.1	**265716**	F-46577.17	**265010**				
F-46327.11	**265009**	F-46577.20	**265010**				
F-46327.12	**265003**	F-46577.25	**268902**				
F-46327.13	**265703**	F-46577.9	**268902**				
F-46327.14	**265809**	F-46578.04	**267001**				
F-46327.15	**268400**	F-46578.07	**267005**				
F-46327.16	**267400**	F-46578.4	**267001**				
F-46327.17	**265008**	F-46578.7	**267005**				
F-46327.2	**265020**	F-46580.15	**265007**				
F-46327.20	**265707**	F-46580.21	**266502**				
F-46327.3	**265281**	F-46592.04	**266502**				
F-46327.4	**265716**	F-46592.09	**265108**				
F-46327.5	**265106**	F-46592.4	**266502**				
F-46327.8	**265004**	F-46596.06	**265904**				
F-46327.9	**266552**	F-46596.10	**265904**				
F-46330.10	**265008**	F-46596.12	**265812**				
F-46336.01	**265011**	F-46596.14	**265814**				
F-46339.02	**266908**	F-46596.15	**265813**				
F-46346	**266555**	F-46596.6	**265904**				
F-46400.01	**265404**	F-46599.05	**265205**				
F-46400.03	**265404**	F-46599.07	**265905**				
F-46513.22	**265005**	F-46599.09	**265205**				
F-46515.27	**265118**	F-46599.11	**265807**				
F-46516.30	**265426**	F-46599.12	**265205**				
F-46516.31	**265426**	F-46599.17	**265903**				
F-46516.56	**265427**	F-46599.18	**265807**				
F-46516.62	**266600**	F-46599.19	**265903**				
F-46516.70	**266600**	F-46599.20	**265905**				
F-46516.72	**265427**	F-46599.23	**265905**				
F-46516.75	**265401**	F-46599.24	**265903**				
F-46516.80	**266600**	F-46599.25	**265807**				
F-46516.81	**265401**	F-46599.32	**265912**				
F-46516.83	**265403**	F-46599.5	**265205**				
F-46518.23	**265416**	F-46599.7	**265905**				
F-46523.11	**266401**	F-46599.9	**265205**				
F-46523.14	**265501**	F-46653.02	**265115**				
F-46523.26	**265801**	F-46653.2	**265115**				
F-46523.33	**266703**	F-46665.10	**265230**				
F-46523.35	**266703**	F-46665.6	**265230**				
F-46523.36	**266703**	F-46681.6	**265077**				
F-46528.18	**265302**	F-46705.11	**265255**				
F-46528.31	**265302**	F-46857	**265430**				
F-46528.34	**265302**	F-46857.03	**265815**				
F-46528.41	**265901**	F-46861.3	**268300**				
F-46528.6	**265302**	F-46886.12	**266801**				
F-46535.10	**265705**	F-46897.05	**266901**				
F-46541.07	**265911**	F-46897.5	**266901**				
F-46541.7	**265911**	F-46949.07	**235205**				
F-46543.07	**265006**	F-46949.50	**235205**				
F-46543.16	**265006**	F-46949.7	**235205**				
F-46543.19	**265006**	F-46954.22	**235102**				
F-46543.34	**265206**	F-46954.50	**235102**				
F-46543.36	**265006**	F-46988.08	**235501**				
F-46543.7	**265006**	F-46988.09	**235501**				
F-46544.10	**265118**	F-46988.50	**235501**				
F-46547	**266705**	F-46988.6	**235501**				
F-46547.03	**266705**	F-46988.8	**235501**				
F-46547.3	**266705**	F-69443.01	**235301**				
F-46550.15	**265704**	F-69443.1	**235301**				
F-46551.07	**265001**	F-69897.01	**238601**				
F-46551.08	**265001**	F-69897.03	**238601**				
F-46551.09	**265001**	FC 69443.1	**235301**				
F-46551.7	**265001**	FC 69897.1	**238601**				
F-46551.8	**265001**	FC 69897.3	**238601**				
F-46551.9	**265001**						
F-46552.06	**265312**						
F-46552.10	**265312**						
F-46552.6	**265312**						
F-46567.06	**265272**						
F-46567.6	**265272**						
F-46577.09	**268902**						

RUVILLE
YOUR PARTNER

INA Ref.	
420 0001 10	**265118**
420 0002 10	**265119**
420 0003 10	**265113**
420 0010 10	**266705**
420 0011 10	**266401**
420 0014 10	**265306**
420 0019 10	**265005**
420 0020 10	**266140**
420 0022 10	**265426**
420 0024 10	**265006**
420 0025 10	**265501**
420 0026 10	**265906**
420 0027 10	**265907**
420 0031 10	**265312**
420 0033 10	**265804**
420 0034 10	**265205**
420 0035 10	**265272**
420 0037 10	**267005**
420 0039 10	**265255**
420 0041 10	**265007**
420 0042 10	**265150**
420 0043 10	**265427**
420 0046 10	**265704**
420 0047 10	**265705**
420 0048 10	**265206**
420 0049 10	**265010**
420 0050 10	**265801**
420 0051 10	**266710**
420 0052 10	**266715**
420 0053 10	**265901**
420 0056 10	**266001**
420 0058 10	**265950**
420 0059 10	**265309**
420 0060 10	**266402**
420 0061 10	**266502**
420 0062 10	**265416**
420 0063 10	**265102**
420 0064 10	**265280**
420 0066 10	**265807**
420 0068 10	**265904**
420 0072 10	**265301**
420 0073 10	**267200**
420 0074 10	**266505**
420 0076 10	**265104**
420 0080 10	**266005**
420 0081 10	**265103**
420 0082 10	**265702**
420 0086 10	**265165**
420 0087 10	**265716**
420 0088 10	**266802**
420 0089 10	**266803**
420 0090 10	**265002**
420 0092 10	**266804**
420 0093 10	**265001**
420 0094 10	**268901**
420 0098 10	**265402**
420 0099 10	**265503**
420 0100 10	**265285**
420 0101 10	**266600**
420 0102 10	**265401**
420 0103 10	**266703**
420 0104 10	**268902**
420 0105 10	**265903**
420 0106 10	**265905**
420 0118 10	**265302**
420 0119 10	**265106**
420 0167 10	**265281**
420 0168 10	**266552**
420 0170 10	**265140**
420 0172 10	**265703**
420 0176 10	**267001**
420 0181 10	**265809**
420 0182 10	**268400**

INA Ref.	
420 0183 10	**267400**
420 0185 10	**265202**
420 0186 10	**265330**
420 0188 10	**265020**
420 0190 10	**265004**
420 0195 10	**265003**
420 0197 10	**266900**
420 0198 10	**267302**
420 0199 10	**267300**
420 0200 10	**267303**
420 0201 10	**267000**
420 0204 10	**267002**
420 0208 10	**265805**
420 0209 10	**265403**
420 0210 10	**265812**
420 0211 10	**265813**
420 0212 10	**265814**
420 0214 10	**265911**
420 0217 10	**265108**
420 0218 10	**265109**
420 0220 10	**265912**
420 0222 10	**265404**
420 0223 10	**266002**
420 0224 10	**265707**
420 0225 10	**265110**
420 0226 10	**265008**
420 0227 10	**265011**
420 0228 10	**266908**
420 0229 10	**265009**
420 0230 10	**266555**
420 0232 10	**266601**
420 0233 10	**265012**
420 0234 10	**266602**
420 0237 10	**266909**
420 0239 10	**266911**
421 0001 10	**265115**
421 0005 10	**265230**
421 0006 10	**265430**
421 0007 10	**265077**
421 0008 10	**265088**
421 0009 10	**265960**
421 0010 10	**265970**
421 0011 10	**265898**
421 0012 10	**265802**
421 0014 10	**266801**
421 0015 10	**268300**
421 0017 10	**266901**
421 0023 10	**265208**
421 0024 10	**265162**
421 0025 10	**265164**
421 0026 10	**268534**
421 0027 10	**266809**
421 0028 10	**266903**
421 0029 10	**269600**
421 0030 10	**266905**
421 0031 10	**266807**
421 0035 10	**266907**
421 0036 10	**266808**
421 0037 10	**266902**
421 0038 10	**266904**
421 0039 10	**266906**
421 0041 10	**265203**
421 0058 10	**265910**
421 0059 10	**265307**
421 0060 10	**265815**
422 0001 10	**235003**
422 0002 10	**235901**
422 0003 10	**235911**
422 0004 10	**238701**
422 0005 10	**235102**
422 0006 10	**235356**
422 0007 10	**235409**
422 0009 10	**235501**

INA Ref.	
422 0010 10	**235205**
422 0011 10	**235206**
422 0012 10	**235410**
422 0013 10	**235455**
422 0017 10	**236501**
422 0018 10	**235921**
422 0031 10	**238000**
422 0032 10	**238600**
422 0033 10	**235301**
422 0034 10	**238601**
422 0036 10	**235001**
422 0037 10	**235110**
422 0038 10	**235116**
422 0039 10	**235320**
422 0040 10	**235340**
422 0042 10	**245002**
422 0043 10	**245006**
422 0044 10	**245103**
422 0045 10	**245104**
422 0046 10	**245106**
422 0047 10	**245108**
422 0050 10	**245535**
422 0052 10	**235202**
422 0053 10	**235404**
422 0054 10	**238401**
422 0055 10	**235117**
422 0056 10	**235118**
422 0057 10	**239100**
422 0058 10	**235700**
422 0059 10	**235408**
422 0060 10	**235903**
422 0061 10	**237400**
422 0062 10	**235207**
422 0063 10	**238400**
422 0064 10	**235809**
422 0066 10	**245155**
422 0068 10	**235204**
422 0071 10	**235103**
422 0072 10	**235701**
422 0075 10	**235302**
422 0078 10	**235502**
422 0080 10	**235807**
422 0088 10	**235704**
422 0092 10	**238403**
422 0096 10	**235004**
422 0099 10	**235106**
422 0100 10	**235105**
422 0101 10	**238402**
422 0102 10	**235406**
422 0104 10	**237401**
422 0107 10	**236600**
422 0108 10	**235405**
422 0109 10	**235005**
422 0110 10	**238404**
422 0113 10	**235801**
422 0116 10	**235107**
422 0117 10	**235013**
422 0118 10	**235407**
422 0119 10	**235411**
422 0124 10	**236603**
422 0125 10	**236602**
422 0128 10	**235303**
422 0129 10	**235304**
422 0130 10	**235802**
422 0131 10	**236900**
422 0138 10	**236901**
422 0139 10	**235108**
422 0140 10	**236902**
422 0220 10	**235011**
422 0221 10	**235006**
422 0222 10	**235007**
422 0223 10	**235008**
422 0224 10	**235009**

INA Ref.	
422 0225 10	**235010**
422 0226 10	**235012**
423 0001 10	**235000**
423 0002 10	**235900**
423 0003 10	**235910**
423 0004 10	**238700**
423 0005 10	**235100**
423 0006 10	**235300**
423 0007 10	**235402**
423 0009 10	**235500**
423 0010 10	**235201**
423 0011 10	**235200**
423 0012 10	**235400**
423 0013 10	**235453**
423 0014 10	**245110**
423 0016 10	**245111**
423 0017 10	**236500**
423 0018 10	**245112**
423 0019 10	**245232**
423 0020 10	**245233**
423 0021 10	**245230**
423 0022 10	**245231**
423 0023 10	**235920**
423 0024 10	**238001**
423 0025 10	**245404**
423 0026 10	**245405**
423 0027 10	**245406**
423 0028 10	**245407**
423 0030 10	**235902**
423 0036 10	**246802**
423 0037 10	**246801**
423 0038 10	**246803**
423 0039 10	**246800**
423 0040 10	**235703**
423 0044 10	**238604**
423 0050 10	**235803**
423 0051 10	**235908**
423 0055 10	**235906**
423 0061 10	**235208**
423 0062 10	**245902**
423 0063 10	**235209**
426 0004 10	**265131**
426 0005 10	**265130**
426 0017 10	**265134**
426 0038 10	**265806**
426 0047 10	**275307**
427 0001 10	**205301**
427 0003 10	**206502**
427 0004 10	**206503**
427 0005 10	**205701**
427 0006 10	**205702**
427 0007 10	**205901**
427 0008 10	**205801**
427 0009 10	**205802**
427 0012 10	**205803**
427 0013 10	**205804**
427 0014 10	**205805**
427 0016 10	**205703**
427 1001 10	**205806**
427 1002 10	**206505**
427 1003 10	**206506**
427 1004 10	**205302**
427 1005 10	**205303**
427 1006 10	**205807**
427 1010 10	**205902**

225007	1	215011	12	245006	2	255005				
225009	1	215015	8	235001			8	265005(HY)		
225011	1	215018	12	245006	2	255005				
225014	1	215014	12	245002	1	255010				
					1	255011				
					1	255012				
					1	255013				
225017	1	215023	12	245006	2	255005				
225018	1	215019	12	245002	1	255010				
					1	255011				
					1	255012				
					1	255013				
225020	1	215024	12	245006	2	255005				
225026	1	215026	12	245002	1	255010				
					1	255011				
					1	255012				
					1	255013				
225028	1	215025					12	265007(HY)		
225029	1	215029	12	245006	2	255005				
225103	1	215109	8	245104			8	265113(HY)		
225104	1	215108	8	245106						
225106	1	215186	16	235116			16	265119(HY)		
	1	215187								
225109	1	215192	16	235116			16	265119(HY)		
	1	215193								
225110	1	215110	12	245108			12	265113(HY)		
225111	1	215111					10	265118(HY)		
225112	1	215112					12	265118(HY)		
225113	1	215113					8	265118(HY)		
225114	1	215115					16	265140(HY)		
225121	1	215194	16	235116			16	265119(HY)		
	1	215195								
225125	1	215171	8	245177						
225168	1	215168	8	245106						
225180	1	215180	12	235110						
	1	215181								
225201	1	215201					8	265208(ME)		
225203	1	215203								
225205	1	215205					8	265202(HY)		
225206	1	215204					8	265208(ME)		
225213	1	215208								
225214	1	215210								
225215	1	215212	8	235204						
225217	1	215200					8	265208(ME)		
225219	1	215214					8	265230(ME)		
225221	1	215218	8	235204						
225230	1	215230					8	265208(ME)		
225300	1	215301	8	235340						
225301	1	215302								
225302	1	215301	8	235340			8	265306(HY)	8	275307
225303	1	215308					16	265307(ME)		
	1	215309								
225304	1	215320	8	235340						
225305	1	215305					16	265302(HY)		
225306	1	215320	8	235340			8	265306(HY)	8	275307
225311	1	215330	8	235340						
225313	1	215330	8	235340			8	265306(HY)	8	275307
225317	1	215315	8	235340						
225319	1	215315	8	235340			8	265306(HY)	8	275307
225320	1	215313	8	235340						

In allen Nockenwellen-Reparatursätzen ist eine Tube Einlauföl enthalten. • Every camshaft kit contains a tube cam lube oil.

RUVILLE
YOUR PARTNER

225322	1	215313	8	235340			8	265306(HY)	8	275307
225325	1	215316	8	235340						
225327	1	215316	8	235340			8	265306(HY)	8	275307
225328	1	215360	8	235320						
225329	1	215360	8	235320			8	265306(HY)	8	275307
225334	1	215318	8	235340			8	265306(HY)	8	275307
225340	1	215340	8	235320						
225342	1	215340	8	235320			8	265306(HY)	8	275307
225350	1	215354	8	235340						
225351	1	215354	8	235340			8	265306(HY)	8	275307
225352	1	215352	8	235340						
225353	1	215352	8	235340			8	265306(HY)	8	275307
225355	1	215355	8	235340						
225356	1	215355	8	235340			8	265306(HY)	8	275307
225360	1	215323	8	235340						
225362	1	215323	8	235340			8	265306(HY)	8	275307
225395	1	215398	8	235340						
225398	1	215398	8	235340			8	265306(HY)	8	275307
225401	1	215420					8	265430(ME)		
225403	1	215409					8	265426(HY)		
225404	1	215411					8	265426(HY)		
225408	1	215499					12	265430(ME)		
225411	1	215407	24	235405			24	265702(HY)		
	1	215408								
	1	215413								
	1	215418								
225414	1	215414					10	265426(HY)		
225415	1	215415					10	265426(HY)		
225417	1	215417					8	265430(ME)		
225419	1	215419					8	265426(HY)		
225498	1	215498					12	265426(HY)		
225542	1	215542	8	245535						
225702	1	215702					10	265426(HY)		
225801	1	215805	16	235809			16	265809(HY)		
	1	215807								
225901	1	215912	8	245910						
225902	1	215913					8	265960(ME)		
225903	1	215907					8	266600(HY)		
225904	1	215916	16	235207			16	268400(HY)		
	1	215918								
225905	1	215909					16	265912(HY)		
	1	215914								
225907	1	215906	8	235901			8	265165(HY)		
225908	1	215915	8	235921			8	265165(HY)		
225910	1	215910					8	265960(ME)		
225920	1	215921					8	265970(ME)		
226507	1	216577					12	265430(ME)		

280021	VAG,Ford,Volvo	Ø: 31 mm x H: 3,00 mm
280022	VAG,Ford,Volvo	Ø: 31 mm x H: 3,05 mm
280024	VAG,Ford,Volvo	Ø: 31 mm x H: 3,15 mm
280025	VAG,Fiat,Ford,Volvo	Ø: 31 mm x H: 3,20 mm
280026	VAG,Fiat,Ford,Volvo	Ø: 31 mm x H: 3,25 mm
280027	VAG,Fiat,Ford,Volvo	Ø: 31 mm x H: 3,30 mm
280028	VAG,Fiat,Ford,Volvo	Ø: 31 mm x H: 3,35 mm
280029	VAG,Fiat,Ford,Volvo	Ø: 31 mm x H: 3,40 mm
280030	VAG,Fiat,Ford,Volvo	Ø: 31 mm x H: 3,45 mm
280031	VAG,Fiat,Ford,Volvo	Ø: 31 mm x H: 3,50 mm
280032	VAG,Fiat,Ford,Volvo	Ø: 31 mm x H: 3,55 mm
280033	VAG,Fiat,Ford,Volvo	Ø: 31 mm x H: 3,60 mm
280035	VAG,Fiat,Ford,Volvo	Ø: 31 mm x H: 3,70 mm
280036	VAG,Fiat,Ford,Volvo	Ø: 31 mm x H: 3,75 mm
280037	VAG,Fiat,Ford,Volvo	Ø: 31 mm x H: 3,80 mm
280038	VAG,Fiat,Ford,Volvo	Ø: 31 mm x H: 3,85 mm
280039	VAG,Fiat,Ford,Volvo	Ø: 31 mm x H: 3,90 mm
280040	VAG,Fiat,Ford,Volvo	Ø: 31 mm x H: 3,95 mm
280041	VAG,Fiat,Ford,Volvo	Ø: 31 mm x H: 4,00 mm
280042	VAG,Fiat,Ford,Volvo	Ø: 31 mm x H: 4,05 mm
280043	VAG,Fiat,Ford,Volvo	Ø: 31 mm x H: 4,10 mm
280044	VAG,Fiat,Ford,Volvo	Ø: 31 mm x H: 4,15 mm
280045	VAG,Fiat,Ford,Volvo	Ø: 31 mm x H: 4,20 mm
280046	VAG,Fiat,Ford,Volvo	Ø: 31 mm x H: 4,25 mm
280047	Fiat,Ford	Ø: 31 mm x H: 4,30 mm
280048	Fiat,Ford	Ø: 31 mm x H: 4,35 mm
280049	Fiat,Ford	Ø: 31 mm x H: 4,40 mm
280050	Fiat,Ford	Ø: 31 mm x H: 4,45 mm
280051	Fiat,Ford	Ø: 31 mm x H: 4,50 mm
280052	Fiat,Ford	Ø: 31 mm x H: 4,55 mm
280053	Fiat,Ford	Ø: 31 mm x H: 4,60 mm
280054	Fiat,Ford	Ø: 31 mm x H: 4,65 mm
280055	Fiat,Ford	Ø: 31 mm x H: 4,70 mm
285100	Mercedes-Benz	Ø: 13 mm x H: 2,50 mm
285101	Mercedes-Benz	Ø: 13 mm x H: 2,70 mm
285103	Mercedes-Benz	Ø: 13 mm x H: 2,80 mm
285104	Mercedes-Benz	Ø: 13 mm x H: 2,85 mm
285105	Mercedes-Benz	Ø: 13 mm x H: 2,90 mm
285106	Mercedes-Benz	Ø: 13 mm x H: 2,95 mm
285107	Mercedes-Benz	Ø: 13 mm x H: 3,00 mm
285108	Mercedes-Benz	Ø: 13 mm x H: 3,05 mm
285109	Mercedes-Benz	Ø: 13 mm x H: 3,35 mm

265130	Mercedes-Benz	Ø: 14,0 mm x H: 2,4 mm
265131	Mercedes-Benz	Ø: 14,0 mm x H: 1,6 mm
265134	Mercedes-Benz	Ø: 14,0 mm x H: 1,9 mm

265132	Mercedes-Benz	Ø: 11,0 mm x H: 2,9 mm
265133	Mercedes-Benz	Ø: 11,0 mm x H: 3,4 mm

RUVILLE
YOUR PARTNER

265001	Ø: 33,00 mm x H: 24,00 mm
265002	Ø: 12,00 mm x H: 34,70 mm
265003	Ø: 12,00 mm x H: 33,40 mm
265004	Ø: 12,00 mm x H: 38,05 mm
265005	Ø: 16,00 mm x H: 48,50 mm
265006	Ø: 35,00 mm x H: 26,00 mm
265007	Ø: 35,00 mm x H: 26,00 mm
265008	Ø: 12,00 mm x H: 29,90 mm
265009	Ø: 12,00 mm x H: 39,30 mm
265010	Ø: 33,00 mm x H: 24,00 mm
265011	Ø: 12,00 mm x H: 34,55 mm
265012	Ø: 28,00 mm x H: 23,50 mm
265020	Ø: 12,00 mm x H: 33,40 mm
265077	Ø: 37,50 mm x H: 27,80 mm
265088	Ø: 37,50 mm x H: 26,00 mm
265102	Ø: 11,00 mm x H: 27,00 mm
265103	Ø: 12,00 mm x H: 36,00 mm
265104	Ø: 11,00 mm x H: 27,00 mm
265106	Ø: 12,00 mm x H: 34,70 mm
265108	Ø: 35,00 mm x H: 26,00 mm
265109	Ø: 12,00 mm x H: 34,45 mm
265110	Ø: 12,00 mm x H: 32,50 mm
265113	Ø: 14,00 mm x H: 29,30 mm
265115	Ø: 35,00 mm x H: 26,00 mm
265118	Ø: 40,00 mm x H: 36,00 mm
265119	Ø: 22,00 mm x H: 51,00 mm
265140	Ø: 33,00 mm x H: 24,00 mm
265150	Ø: 35,00 mm x H: 24,00 mm
265162	Ø: 31,30 mm x H: 76,88 mm
265164	Ø: 27,98 mm x H: 60,16 mm
265165	Ø: 12,00 mm x H: 34,70 mm
265202	Ø: 22,20 mm x H: 44,67 mm
265203	Ø: 28,00 mm x H: 22,20 mm
265205	Ø: 28,37 mm x H: 26,00 mm
265206	Ø: 35,00 mm x H: 26,00 mm
265208	Ø: 24,00 mm x H: 47,00 mm
265230	Ø: 35,00 mm x H: 28,40 mm
265255	Ø: 22,22 mm x H: 55,00 mm
265272	Ø: 30,00 mm x H: 27,00 mm
265280	Ø: 42,00 mm x H: 34,00 mm
265281	Ø: 13,00 mm x H: 39,20 mm
265285	Ø: 16,00 mm x H: 51,20 mm
265301	Ø: 13,00 mm x H: 36,00 mm
265302	Ø: 32,00 mm x H: 26,50 mm
265306	Ø: 21,40 mm x H: 67,90 mm
265307	Ø: 31,00 mm x H: 26,00 mm
265309	Ø: 32,00 mm x H: 26,00 mm
265312	Ø: 32,00 mm x H: 26,00 mm
265330	Ø: 12,00 mm x H: 35,60 mm
265401	Ø: 35,00 mm x H: 26,00 mm
265402	Ø: 12,00 mm x H: 34,50 mm
265403	Ø: 35,00 mm x H: 26,00 mm
265404	Ø: 12,00 mm x H: 32,70 mm
265416	Ø: 31,00 mm x H: 26,00 mm
265426	Ø: 35,00 mm x H: 26,00 mm
265427	Ø: 35,00 mm x H: 26,00 mm
265430	Ø: 35,00 mm x H: 28,80 mm
265501	Ø: 33,00 mm x H: 26,00 mm
265503	Ø: 12,00 mm x H: 39,50 mm
265702	Ø: 13,00 mm x H: 36,00 mm

265703	Ø: 12,00 mm x H: 32,70 mm
265704	Ø: 24,00 mm x H: 24,00 mm
265705	Ø: 33,50 mm x H: 26,00 mm
265707	Ø: 12,00 mm x H: 34,60 mm
265716	Ø: 12,00 mm x H: 34,70 mm
265801	Ø: 33,00 mm x H: 26,00 mm
265802	Ø: 37,00 mm x H: 30,50 mm
265804	Ø: 11,00 mm x H: 25,50 mm
265805	Ø: 33,00 mm x H: 24,00 mm
265807	Ø: 28,37 mm x H: 26,00 mm
265809	Ø: 12,00 mm x H: 37,70 mm
265812	Ø: 28,38 mm x H: 26,00 mm
265813	Ø: 28,38 mm x H: 26,00 mm
265814	Ø: 28,38 mm x H: 26,00 mm
265815	Ø: 35,00 mm x H: 24,00 mm
265898	Ø: 35,00 mm x H: 29,20 mm
265901	Ø: 32,00 mm x H: 26,00 mm
265903	Ø: 28,37 mm x H: 26,00 mm
265904	Ø: 28,37 mm x H: 26,00 mm
265905	Ø: 28,37 mm x H: 26,00 mm
265906	Ø: 14,00 mm x H: 26,00 mm
265907	Ø: 15,00 mm x H: 43,35 mm
265910	Ø: 34,00 mm x H: 25,00 mm
265911	Ø: 30,00 mm x H: 24,00 mm
265912	Ø: 28,37 mm x H: 26,00 mm
265950	Ø: 32,00 mm x H: 26,00 mm
265960	Ø: 34,00 mm x H: 35,00 mm
265970	Ø: 38,00 mm x H: 32,90 mm
266001	Ø: 35,00 mm x H: 26,00 mm
266002	Ø: 12,00 mm x H: 34,30 mm
266005	Ø: 33,00 mm x H: 24,00 mm
266140	Ø: 21,40 mm x H: 54,00 mm
266401	Ø: 33,00 mm x H: 26,00 mm
266402	Ø: 33,00 mm x H: 24,00 mm
266502	Ø: 35,00 mm x H: 26,00 mm
266505	Ø: 32,00 mm x H: 26,00 mm
266552	Ø: 12,00 mm x H: 33,40 mm
266555	Ø: 12,00 mm x H: 34,50 mm
266600	Ø: 35,00 mm x H: 26,00 mm
266601	Ø: 12,00 mm x H: 34,80 mm
266602	Ø: 12,00 mm x H: 32,70 mm
266703	Ø: 33,00 mm x H: 24,40 mm
266705	Ø: 35,00 mm x H: 26,00 mm
266710	Ø: 11,00 mm x H: 25,80 mm
266715	Ø: 11,00 mm x H: 25,80 mm
266801	Ø: 30,20 mm x H: 24,00 mm
266802	Ø: 25,60 mm x H: 48,50 mm
266803	Ø: 30,00 mm x H: 24,00 mm
266804	Ø: 31,00 mm x H: 24,50 mm
266807	Ø: 25,00 mm x H: 44,50 mm
266808	Ø: 26,00 mm x H: 44,50 mm
266809	Ø: 30,00 mm x H: 24,00 mm
266900	Ø: 20,00 mm x H: 64,25 mm
266902	Ø: 21,50 mm x H: 51,00 mm
266903	Ø: 28,00 mm x H: 22,00 mm
266904	Ø: 22,25 mm x H: 45,80 mm
266905	Ø: 25,00 mm x H: 58,00 mm
266906	Ø: 24,45 mm x H: 45,60 mm
266907	Ø: 38,00 mm x H: 22,80 mm
266908	Ø: 12,00 mm x H: 37,36 mm

266909	Ø: 12,00 mm x H: 37,30 mm
266911	Ø: 12,00 mm x H: 32,60 mm
267000	Ø: 12,00 mm x H: 20,62 mm
267001	Ø: 30,00 mm x H: 24,00 mm
267002	Ø: 33,00 mm x H: 26,00 mm
267005	Ø: 30,00 mm x H: 24,00 mm
267200	Ø: 30,00 mm x H: 27,00 mm
267300	Ø: 13,96 mm x H: 44,74 mm
267302	Ø: 15,90 mm x H: 52,50 mm
267303	Ø: 12,96 mm x H: 25,73 mm
267400	Ø: 12,00 mm x H: 32,70 mm
268300	Ø: 27,00 mm x H: 34,90 mm
268400	Ø: 12,00 mm x H: 33,40 mm
268534	Ø: 20,00 mm x H: 78,00 mm
268901	Ø: 11,00 mm x H: 25,80 mm
268902	Ø: 33,00 mm x H: 24,00 mm
269600	Ø: 31,00 mm x H: 25,00 mm

205301	Alfa Romeo	8
205301	Fiat	9
205301	Opel	10
205301	Vauxhall	11
205302	Opel	10
205302	Vauxhall	11
205303	Opel	10
205303	Vauxhall	11
205701	Audi	8
205701	Skoda	11
205701	Volkswagen	11
205702	Audi	8
205702	Skoda	11
205702	Volkswagen	11
205703	Audi	8
205703	Volkswagen	11
205801	Fiat	9
205801	Lancia	9, 10
205802	Alfa Romeo	8
205802	Lancia	9
205803	Alfa Romeo	8
205803	Fiat	9
205804	Alfa Romeo	8
205804	Fiat	9
205804	Lancia	10
205805	Opel	10
205805	Vauxhall	11
205806	Fiat	9
205806	Lancia	10
205807	Alfa Romeo	8
205807	Fiat	9
205901	Citroën	9
205901	Peugeot	10
205902	Citroën	9
205902	Peugeot	10
206502	Ford	9
206502	Volvo	11, 12
206503	Ford	9
206503	Volvo	11, 12
206505	Volvo	11, 12
206506	Volvo	11, 12
215001	BMW	45, 47
215002	BMW	45, 47
215003	BMW	45, 47, 49
215004	BMW	45, 47, 49
215006	BMW	43, 47
215011	BMW	43, 47
215013	BMW	45, 47, 49
215014	BMW	47, 49, 51
215015	BMW	43, 45, 47
215015 [4]		siehe Klappseite vorn • see fold in front.
215018	BMW	43, 47
215019	BMW	47, 51
215023	BMW	43, 55
215024	BMW	43, 47
215025	BMW	45, 49, 53
215025	Opel	133
215025	Vauxhall	193
215026	BMW	47, 51
215029	BMW	45, 47
215031	BMW	45, 47, 55
215101	Mercedes-Benz	101, 103, 107, 111, 113, 115
215101	Puch	151
215102	Mercedes-Benz	101, 103, 107, 111, 113, 115
215102	Puch	151
215103	Mercedes-Benz	101, 111
215104	Mercedes-Benz	101
215107	Mercedes-Benz	105
215108	Mercedes-Benz	101, 109
215108	Puch	151
215109	Mercedes-Benz	101, 109
215109	Puch	151
215110	Mercedes-Benz	101, 107, 111, 113, 115
215111	Mercedes-Benz	101, 103, 107, 111
215112	Mercedes-Benz	103, 107, 111
215113	Mercedes-Benz	101, 103, 107, 117, 119
215114	Mercedes-Benz	109, 117
215115	Mercedes-Benz	105, 109, 117, 119
215154	Mercedes-Benz	243, 245
215160	Mercedes-Benz	101, 103, 105, 107, 117, 119
215161	Mercedes-Benz	101, 103, 105, 107, 111, 115, 117, 119
215162	Mercedes-Benz	101, 103, 105, 107, 111, 115

215168	Mercedes-Benz	101
215171	Mercedes-Benz	101, 109
215180	Mercedes-Benz	101, 111, 113, 115
215180	Puch	151
215181	Mercedes-Benz	101, 111, 113, 115
215181	Puch	151
215186	Mercedes-Benz	113
215187	Mercedes-Benz	113
215188	Mercedes-Benz	113, 115
215189	Mercedes-Benz	113, 115
215192	Mercedes-Benz	113, 115
215193	Mercedes-Benz	113, 115
215194	Mercedes-Benz	113, 115
215195	Mercedes-Benz	113, 115
215196	Mercedes-Benz	113
215197	Mercedes-Benz	113
215198	Mercedes-Benz	113
215199	Mercedes-Benz	111, 113
215201	Ford	81, 83, 85, 87
215202	Ford	81, 83
215203	Ford	81, 83, 85, 87
215204	Ford	83, 85, 87
215205	Ford	89
215208	Ford	81, 83, 85, 87
215210	Ford	81, 83, 87, 89
215212	Ford	81, 87, 89
215214	Ford	83, 85, 87, 89
215218	Ford	81, 87, 89
215224	Ford	87, 89
215230	Ford	85
215301	Opel	129, 131
215301	Vauxhall	185, 193
215302	Opel	127, 129, 131, 135, 137
215302	Vauxhall	185, 187, 189, 191, 193, 195
215303	Opel	125, 135
215303	Vauxhall	185, 187, 189
215304	Opel	125, 127, 129, 131, 133, 135, 137
215304	Vauxhall	187
215305	Opel	127, 131, 133, 135, 137
215306	Opel	125, 127, 135
215306	Vauxhall	185, 187, 195
215307	Opel	127, 129, 133, 135
215307	Vauxhall	187, 189, 191, 195
215308	Opel	127, 129, 131, 133
215308	Vauxhall	191
215309	Opel	127, 129, 131, 133
215309	Vauxhall	191
215310	Opel	125, 127, 129, 131, 133, 135, 137
215310	Vauxhall	185, 187, 189, 191, 193, 195
215311	Opel	125, 127, 129, 131, 133, 135, 137
215311	Vauxhall	185, 187, 189, 191, 193, 195
215312	Opel	129
215312	Vauxhall	189, 191
215313	Opel	125, 129, 133, 135
215313	Vauxhall	185, 189, 193
215314	Opel	125, 127, 129, 131, 133, 135, 137
215314	Vauxhall	185, 187, 191, 193, 195
215315	Opel	125, 127, 129, 131, 133, 135
215315	Vauxhall	185, 187, 189, 193
215316	Opel	129
215316	Vauxhall	193
215318	Opel	125, 131, 133
215318	Vauxhall	185, 189
215320	Opel	125, 129, 131, 133
215320	Vauxhall	185, 189, 193
215321	Opel	125, 129, 131
215321	Vauxhall	185, 191
215323	Opel	125, 127, 129, 131, 133, 135
215323	Vauxhall	185, 187, 189, 191, 193
215325	Opel	125, 133, 135
215325	Vauxhall	189
215329	Opel	133, 135
215329	Vauxhall	189
215330	Opel	125, 131, 133
215330	Vauxhall	185, 189
215331	Opel	133, 137
215331	Vauxhall	193, 195
215332	Opel	129, 133, 135
215332	Vauxhall	193
215333	Lada	95
215333	Opel	127, 129, 133, 135
215333	Vauxhall	187, 189

RUVILLE
YOUR PARTNER

215334	Lada	95
215334	Opel	127, 129, 133, 135
215334	Vauxhall	187, 189
215335	Opel	133, 137
215335	Vauxhall	193, 195
215336	Opel	127, 131, 133, 135, 137
215336	Vauxhall	187, 191, 193, 195
215337	Opel	127, 131, 133, 135, 137
215337	Vauxhall	187, 191, 193, 195
215340	Opel	125, 131, 133
215340	Vauxhall	185, 189
215352	Opel	125, 129, 131
215352	Vauxhall	185, 189, 191, 193
215354	Opel	125, 129, 133
215354	Vauxhall	185, 187, 189, 191, 193
215355	Opel	125, 129, 131
215355	Vauxhall	185, 189, 191, 193
215360	Opel	125, 127, 131, 133, 135
215360	Vauxhall	185, 187, 189
215397	Opel	131, 133
215397	Vauxhall	189
215398	Opel	129
215398	Vauxhall	189, 191, 193
215399	Opel	125, 133, 135
215399	Vauxhall	189
215402	Audi	27
215402	Seat	165, 171, 173, 175
215402	Skoda	177
215402	Volkswagen	197, 207, 215, 223
215403	Seat	165, 169, 171
215403	Skoda	175, 177
215403	Volkswagen	195, 197, 207, 223, 229
215404	Audi	27, 29, 31, 35
215404	Seat	159, 161, 165, 169, 171, 175
215404	Skoda	175, 177, 179
215404	Volkswagen	197, 207, 211, 213, 215, 219, 221, 229, 233, 235
215405	Volkswagen	213, 233, 235
215406	Audi	27
215406	Seat	161, 165, 169
215406	Skoda	175
215406	Volkswagen	199, 213, 225, 229
215407	Audi	29, 31, 33, 35, 37
215407	Skoda	179
215407	Volkswagen	219, 221
215408	Audi	29, 31, 33, 35, 37
215408	Skoda	179
215408	Volkswagen	219, 221
215409	Audi	23, 29, 35, 39
215409	Ford	87
215409	Seat	159, 163, 165, 167, 169, 173
215409	Volkswagen	197, 205, 207, 219, 223, 231, 233, 237
215410	Audi	19, 23, 39
215410	Volkswagen	197, 199, 209, 215, 229, 231
215411	Audi	23
215411	Seat	161, 163, 165, 167, 171
215411	Volkswagen	197, 205, 213, 223, 225, 227, 237
215413	Audi	29, 31, 33, 35, 37
215413	Skoda	179
215413	Volkswagen	219, 221
215414	Volkswagen	235
215415	Audi	23, 25
215415	Volkswagen	235
215417	Volkswagen	233
215418	Audi	29, 31, 33, 35, 37
215418	Skoda	179
215418	Volkswagen	219, 221
215419	Audi	21, 23
215419	Seat	163, 167, 171, 173
215419	Skoda	175, 177
215419	Volkswagen	197, 205, 219, 225, 227, 235, 237
215420	Audi	21, 23
215420	Volkswagen	197, 201, 209, 215, 217, 229, 233
215421	Audi	29, 31, 37
215421	Seat	161, 171, 175
215421	Skoda	177, 179
215421	Volkswagen	207, 211, 221, 233
215422	Audi	29, 31, 37
215422	Seat	161, 171, 175
215422	Skoda	177, 179
215422	Volkswagen	207, 211, 221, 233
215423	Audi	29, 31
215423	Seat	161, 171, 175
215423	Skoda	177
215423	Volkswagen	207, 211, 221, 233
215424	Audi	27, 29
215424	Seat	161, 163, 165, 167, 169, 171, 173
215424	Skoda	177
215424	Volkswagen	195, 203, 205, 213, 215, 217, 221, 223, 235, 237
215425	Audi	19, 21, 23
215425	Seat	161, 163, 167, 171, 173
215425	Volkswagen	197, 201, 203, 205, 209, 215, 217, 221, 229, 231, 235
215428	Volkswagen	235
215429	Volkswagen	197, 207
215431	Volkswagen	213, 233, 235
215432	Audi	31, 37
215480	Audi	21, 23
215480	Volkswagen	203, 211, 217, 219
215498	Volkswagen	211, 213
215499	Volkswagen	211, 213
215501	Renault	151, 153, 155, 157
215502	Renault	155
215503	Renault	155
215506	Renault	155
215507	Dacia	69
215507	Renault	153, 155
215508	Renault	155
215509	Renault	153, 155
215519	Renault	151
215520	Renault	151
215542	Renault	151, 153, 157
215601	Alfa Romeo	15
215602	Alfa Romeo	15, 17
215603	Alfa Romeo	15, 17
215701	Audi	31
215701	Volkswagen	221
215702	Audi	25, 27, 35
215702	Volkswagen	211, 213, 235
215702	Volvo	239, 241
215801	Citroën	65
215801	Fiat	73
215801	Opel	133
215801	Peugeot	147
215801	Renault	155
215801	Vauxhall	193
215802	Fiat	73, 77, 79
215804	Alfa Romeo	15
215804	Fiat	71, 75
215804	Lancia	97
215805	Fiat	71, 73, 75, 77, 79
215805	Lancia	97, 99
215807	Fiat	71, 73, 75, 77, 79
215807	Lancia	97, 99
215808	Fiat	71, 75, 77, 79
215808	Lancia	97, 99
215809	Fiat	75, 79
215809	Lancia	99
215810	Fiat	71, 75
215811	Fiat	73, 77, 79
215811	Lancia	97, 99
215901	Citroën	57, 67, 69
215901	Peugeot	137
215901	Rover	157
215902	Citroën	59
215902	Peugeot	139, 143
215902	Rover	157
215903	Citroën	65
215903	Peugeot	147
215904	Citroën	63, 67
215904	Peugeot	145
215905	Citroën	65
215905	Peugeot	147
215906	Citroën	57, 61, 63, 65, 67, 69
215906	Fiat	73, 79
215906	Peugeot	139, 141, 145, 147, 149
215907	Citroën	65
215907	Peugeot	147
215908	Citroën	63, 67, 69
215908	Peugeot	141, 143, 145, 147
215909	Citroën	57, 59, 69
215909	Peugeot	139, 141, 147, 149
215910	Citroën	57, 59, 63, 65, 67, 69

215910	Fiat	73, 79, 81
215910	Lada	95
215910	Peugeot	139, 141, 143, 145, 147, 149
215910	Talbot	181
215912	Citroën	57, 65, 67
215912	Peugeot	137, 139
215912	Renault	151
215912	Talbot	181
215913	Citroën	57, 59, 63, 65, 67, 69
215913	Lada	95
215913	Peugeot	139, 141, 143, 145, 147, 149
215913	Talbot	181
215914	Citroën	57, 59, 69
215914	Peugeot	139, 141, 147, 149
215915	Citroën	59, 65, 69
215915	Ford	85
215915	Peugeot	137, 139, 141, 147
215916	Citroën	57, 59, 61, 63, 69
215916	Ford	81, 85
215916	Peugeot	139, 141, 143, 145, 147, 149
215918	Citroën	57, 59, 61, 63, 69
215918	Ford	81, 85
215918	Peugeot	139, 141, 143, 145, 147, 149
215919	Citroën	63, 65, 67, 69
215919	Peugeot	141, 143, 145, 147
215920	Citroën	57, 65, 69
215920	Peugeot	137, 141, 149
215921	Peugeot	139, 143
216000	Alfa Romeo	15, 17
216000	Fiat	73, 75, 77, 79
216000	Lancia	97
216200	Hyundai	91, 93
216201	Hyundai	91, 93
216202	Hyundai	91
216577	Volvo	237
216616	Citroën	57, 67, 69
216616	Peugeot	143, 149
216800	Nissan	121, 123
216801	Nissan	123
216802	Nissan	123
216803	Nissan	123
217202	Lada	95
217301	Mitsubishi	121
217302	Mitsubishi	121
217303	Mitsubishi	121
225007	BMW	42, 46
225009	BMW	42, 44, 46
225011	BMW	42, 46
225014	BMW	46, 48, 50
225017	BMW	42, 54
225018	BMW	46, 50
225020	BMW	42, 46
225026	BMW	46, 50
225028	BMW	44, 48
225028	Opel	132
225028	Vauxhall	192
225029	BMW	44, 46
225103	Mercedes-Benz	100, 108
225103	Puch	150
225104	Mercedes-Benz	100, 108
225104	Puch	150
225106	Mercedes-Benz	112
225109	Mercedes-Benz	112, 114
225110	Mercedes-Benz	100, 106, 110, 112, 114
225111	Mercedes-Benz	100, 102, 106, 110
225112	Mercedes-Benz	102, 106, 110
225113	Mercedes-Benz	100, 102, 106, 116, 118
225114	Mercedes-Benz	104, 108, 116, 118
225121	Mercedes-Benz	112, 114
225125	Mercedes-Benz	100, 108
225168	Mercedes-Benz	100
225180	Mercedes-Benz	100, 110, 112, 114
225180	Puch	150
225201	Ford	80, 82, 84, 86
225203	Ford	80, 82, 84, 86
225205	Ford	88
225206	Ford	84, 86
225213	Ford	80, 82, 84, 86
225214	Ford	80, 82, 86, 88
225215	Ford	80, 86, 88
225217	Ford	80, 82
225219	Ford	82, 84, 86, 88
225221	Ford	80, 86, 88
225230	Ford	84
225300	Opel	128, 130
225300	Vauxhall	192
225301	Opel	126, 128, 130, 134, 136
225301	Vauxhall	184, 186, 188, 190, 192, 194
225302	Opel	128, 130
225302	Vauxhall	192
225303	Opel	126, 128, 130, 132
225303	Vauxhall	190
225304	Opel	124, 128, 130, 132
225304	Vauxhall	184, 188, 192
225305	Opel	126, 130, 132, 134, 136
225306	Opel	124, 128, 130, 132
225306	Vauxhall	184, 188, 192
225311	Opel	124, 130, 132
225311	Vauxhall	184, 188
225313	Opel	124, 130, 132
225313	Vauxhall	184, 188
225317	Opel	124, 126, 128, 130, 132, 134
225317	Vauxhall	184, 186, 188, 192
225319	Opel	124, 126, 128, 130, 132, 134
225319	Vauxhall	184, 186, 188, 192
225320	Opel	124, 128, 132, 134
225320	Vauxhall	184, 188, 192
225322	Opel	124, 128, 132, 134
225322	Vauxhall	184, 188, 192
225325	Opel	128
225325	Vauxhall	192
225327	Opel	128
225327	Vauxhall	192
225328	Opel	124, 126, 130, 132, 134
225328	Vauxhall	184, 186, 188
225329	Opel	124, 126, 130, 132, 134
225329	Vauxhall	184, 186, 188
225334	Opel	124, 130, 132
225334	Vauxhall	184, 188
225340	Opel	124, 130, 132
225340	Vauxhall	184, 188
225342	Opel	124, 130, 132
225342	Vauxhall	184, 188
225350	Opel	124, 128, 132
225350	Vauxhall	184, 186, 188, 190, 192
225351	Opel	124, 128, 132
225351	Vauxhall	184, 186, 188, 190, 192
225352	Opel	124, 128, 130
225352	Vauxhall	184, 188, 190, 192
225353	Opel	124, 128, 130
225353	Vauxhall	184, 188, 190, 192
225355	Opel	124, 128, 130
225355	Vauxhall	184, 188, 190, 192
225356	Opel	124, 128, 130
225356	Vauxhall	184, 188, 190, 192
225360	Opel	124, 126, 128, 130, 132, 134
225360	Vauxhall	184, 186, 188, 190, 192
225362	Opel	124, 126, 128, 130, 132, 134
225362	Vauxhall	184, 186, 188, 190, 192
225395	Opel	128
225395	Vauxhall	188, 190, 192
225398	Opel	128
225398	Vauxhall	188, 190, 192
225401	Audi	20, 22
225401	Volkswagen	196, 200, 208, 214, 216, 228, 232
225403	Audi	22, 28, 34, 38
225403	Ford	86
225403	Seat	158, 162, 164, 166, 168, 172
225403	Volkswagen	196, 204, 206, 218, 222, 230, 232, 236
225404	Audi	22
225404	Seat	160, 162, 164, 166, 170
225404	Volkswagen	196, 204, 212, 222, 224, 226, 236
225408	Volkswagen	210, 212
225411	Audi	28, 30, 32, 34, 36
225411	Skoda	178
225411	Volkswagen	218, 220
225414	Volkswagen	234
225415	Volkswagen	234
225417	Volkswagen	232
225419	Audi	20, 22
225419	Seat	162, 166, 170, 172
225419	Skoda	174, 176
225419	Volkswagen	196, 204, 218, 224, 226, 234, 236
225498	Volkswagen	210, 212

RUVILLE
YOUR PARTNER

225542	Renault	150, 152, 156
225702	Audi	26, 34
225702	Volkswagen	210, 212
225702	Volvo	238, 240
225801	Fiat	70, 72, 74, 76, 78
225801	Lancia	96, 98
225901	Citroën	56, 64, 66
225901	Peugeot	136, 138
225901	Renault	150
225901	Talbot	180
225902	Citroën	56, 58, 62, 64, 66, 68
225902	Lada	94
225902	Peugeot	138, 140, 142, 144, 146, 148
225902	Talbot	180
225903	Citroën	64
225903	Peugeot	146
225904	Citroën	56, 58, 60, 62, 68
225904	Ford	80, 84
225904	Peugeot	138, 140, 142, 144, 146, 148
225905	Citroën	56, 58, 68
225905	Peugeot	138, 140, 148
225907	Citroën	56, 60, 62, 64, 66, 68
225907	Fiat	72, 78
225907	Peugeot	138, 140, 144, 146, 148
225908	Citroën	58, 64, 68
225908	Ford	84
225908	Peugeot	136, 138, 140, 146
225910	Citroën	56, 58, 62, 64, 66, 68
225910	Lada	94
225910	Peugeot	138, 140, 142, 144, 146, 148
225910	Talbot	180
225920	Peugeot	138, 142
226507	Volvo	236
235000	BMW	43, 45, 47, 49, 51, 53, 55
235000	Land Rover	99
235000	Opel	133
235000	Rover	157
235000	Vauxhall	193
235000 [6]		siehe Klappseite vorn • see fold in front.
235001	BMW	43, 45, 47, 53
235003	BMW	43, 45, 47, 49, 51, 53, 55
235003	Land Rover	99
235003	Opel	133
235003	Rover	157
235003	Vauxhall	193
235004	BMW	43, 47, 51, 53
235005	BMW	51, 53, 55
235006	BMW	43, 45, 47, 49, 51, 53, 55
235006	Citroën	57, 59, 61, 63
235006	Mini	119, 121
235006	Peugeot	139, 141, 143, 147, 149
235006 [7]		269
235007	BMW	43, 45, 47, 49, 51, 53, 55
235007	Citroën	57, 59, 61, 63
235007	Mini	119, 121
235007	Peugeot	139, 141, 143, 147, 149
235007 [7]		269
235008	BMW	43, 45, 47, 49, 51, 53, 55
235008	Citroën	57, 59, 61, 63
235008	Mini	119, 121
235008	Peugeot	139, 141, 143, 147, 149
235008 [7]		269
235009	BMW	43, 45, 47, 49, 51, 53, 55
235009	Citroën	57, 59, 61, 63
235009	Mini	119, 121
235009	Peugeot	139, 141, 143, 147, 149
235009 [7]		269
235010	BMW	43, 45, 47, 49, 51, 53, 55
235010	Citroën	57, 59, 61, 63
235010	Mini	119, 121
235010	Peugeot	139, 141, 143, 147, 149
235010 [7]		269
235011	BMW	43, 45, 49, 53
235012	BMW	43, 45, 47, 49, 51, 53, 55
235012	Citroën	57, 59, 61, 63
235012	Mini	119, 121
235012	Peugeot	139, 141, 143, 147, 149
235013	BMW	43, 47, 51, 53
235100	Mercedes-Benz	103, 119
235100 [6]		siehe Klappseite vorn • see fold in front.
235102	Mercedes-Benz	103, 119
235103	Mercedes-Benz	105, 109, 115
235105	Mercedes-Benz	115
235106	Mercedes-Benz	103, 107, 109, 111, 117
235107	Mercedes-Benz	103, 105, 107, 109, 115, 117
235108	Mercedes-Benz	107, 115
235110	Mercedes-Benz	101, 111, 113, 115
235110	Puch	151
235116	Mercedes-Benz	103, 113, 115
235117	Mercedes-Benz	103, 105, 107, 109, 111, 113, 115, 117, 119
235118	Chrysler	57
235118	Jeep	93
235118	Mercedes-Benz	103, 105, 107, 109, 111, 115, 117, 119
235118	Mitsubishi	121
235118	Smart (MCC)	179
235200	Ford	85, 87, 89
235200 [6]		siehe Klappseite vorn • see fold in front.
235201	Ford	89
235201	Ford USA	91
235201 [6]		siehe Klappseite vorn • see fold in front.
235202	Citroën	63
235202	Jaguar	93
235202	Land Rover	99
235202	Peugeot	145
235204	Ford	81, 87, 89
235205	Ford	89
235205	Ford USA	91
235206	Ford	85, 87, 89
235207	Citroën	57, 59, 61, 63, 69
235207	Fiat	79
235207	Ford	81, 85
235207	Mazda	99
235207	Mini	119, 121
235207	Peugeot	139, 141, 143, 145, 147, 149
235207	Suzuki	179
235207	Volvo	239, 241
235208	Citroën	65
235208	Fiat	73
235208	Ford	89, 91
235208	Land Rover	99
235208	Peugeot	147
235208 [6]		siehe Klappseite vorn • see fold in front.
235209	Ford	89
235209 [6]		siehe Klappseite vorn • see fold in front.
235300	Opel	125, 127, 129, 131, 133, 135
235300	Vauxhall	185, 187, 189, 191, 193
235300 [6]		siehe Klappseite vorn • see fold in front.
235301	Alfa Romeo	17
235301	Chevrolet	55
235301	Opel	125, 131, 135, 137
235301	Saab	157, 159
235301	Suzuki	179
235301	Vauxhall	185, 191, 193, 195
235302	Alfa Romeo	15, 17
235302	Fiat	71, 73, 75, 77, 79
235302	Lancia	97
235302	Opel	127, 129, 131, 135, 137
235302	Saab	159
235302	Suzuki	179
235302	Vauxhall	187, 191, 193, 195
235303	Chevrolet	55, 57
235303	Opel	125
235303	Vauxhall	185
235304	Chevrolet	55, 57
235304	Opel	125
235304	Vauxhall	185
235320	Opel	125, 127, 129, 131, 133, 135
235320	Vauxhall	185, 187, 189, 191
235340	Daewoo	69
235340	Opel	125, 127, 129, 131, 133, 135
235340	Vauxhall	185, 187, 189, 191, 193
235356	Opel	125, 127, 129, 131, 133, 135
235356	Vauxhall	185, 187, 189, 191, 193
235400	Audi	27
235400	Seat	159, 161, 163, 165, 169, 171, 173
235400	Skoda	175, 177
235400	Volkswagen	195, 197, 205, 207, 209, 213, 221, 223, 225, 227, 229, 233
235400 [6]		siehe Klappseite vorn • see fold in front.
235402	Audi	27, 29, 31
235402	Seat	159, 171, 173, 175
235402	Volkswagen	195, 197, 205, 215, 219, 221, 233
235402 [6]		siehe Klappseite vorn • see fold in front.

235404	Audi	27
235404	Seat	159, 169, 171
235404	Skoda	177
235404	Volkswagen	199, 205, 207, 209, 211, 221, 229, 233
235405	Audi	29, 31, 33, 35, 37
235405	Skoda	179
235405	Volkswagen	219, 221
235406	Audi	27, 29, 31, 33, 35, 37, 41
235406	Porsche	151
235406	Seat	159, 161, 167, 169, 171, 175
235406	Skoda	175, 177, 179
235406	Volkswagen	207, 209, 211, 213, 221, 227, 229, 233, 235
235407	Volkswagen	233
235408	Audi	27, 29, 31, 35, 41
235408	Seat	159, 167, 171, 175
235408	Skoda	177
235408	Volkswagen	199, 207, 209, 211, 215, 221, 229, 233
235409	Audi	27, 29, 31
235409	Seat	159, 165, 171, 173, 175
235409	Skoda	177
235409	Volkswagen	195, 197, 205, 207, 209, 211, 215, 219, 221, 233
235410	Audi	27
235410	Seat	159, 161, 163, 165, 169, 171, 173
235410	Skoda	175, 177
235410	Volkswagen	195, 197, 205, 207, 209, 213, 221, 223, 225, 227, 229, 233
235411	Volkswagen	233
235453	Seat	161, 163, 165, 169
235453	Skoda	175
235453	Volkswagen	199, 213, 223, 225, 229, 233
235453 [6]		siehe Klappseite vorn • see fold in front.
235455	Seat	161, 163, 165, 169
235455	Skoda	175
235455	Volkswagen	199, 213, 223, 225, 229, 233
235500	Dacia	69
235500	Nissan	123
235500	Opel	137
235500	Renault	153, 155, 157
235500	Vauxhall	195
235500 [6]		siehe Klappseite vorn • see fold in front.
235501	Dacia	69
235501	Nissan	123
235501	Opel	137
235501	Renault	153, 155, 157
235501	Vauxhall	195
235502	Nissan	123, 125
235502	Opel	137
235502	Renault	153, 155, 157
235502	Vauxhall	195
235700	Audi	27, 31, 33, 35, 37, 41
235700	Seat	159, 171, 175
235700	Skoda	177, 179
235700	Volkswagen	199, 207, 209, 211, 221, 229, 233
235701	Audi	29, 37, 41, 43
235701	Ford	87
235701	Seat	159, 171, 173
235701	Skoda	177
235701	Volkswagen	195, 199, 207, 213, 215, 221, 231, 233, 235
235703	Audi	33, 35, 37, 41
235703 [6]		siehe Klappseite vorn • see fold in front.
235704	Audi	31, 33, 41
235801	Alfa Romeo	17
235801	Lancia	97
235802	Alfa Romeo	17
235802	Fiat	77
235803	Peugeot	147
235803 [6]		siehe Klappseite vorn • see fold in front.
235807	Alfa Romeo	15, 17
235807	Fiat	73, 79
235807	Lancia	97
235807	Opel	127, 129, 135, 137
235807	Vauxhall	187, 193, 195
235809	Alfa Romeo	17
235809	Fiat	71, 73, 75, 77, 79
235809	Ford	87
235809	Lancia	97, 99
235809	Opel	125, 127, 129, 131, 133, 135
235809	Suzuki	179, 181
235809	Vauxhall	185, 187, 189, 191, 193

235900	Citroën	57, 61, 63, 65, 67, 69
235900	Fiat	73, 79, 81
235900	Lancia	99
235900	Peugeot	139, 141, 145, 147, 149
235900 [6]		siehe Klappseite vorn • see fold in front.
235901	Citroën	57, 61, 63, 65, 67, 69
235901	Fiat	73, 79, 81
235901	Lancia	99
235901	Peugeot	139, 141, 145, 147, 149
235902	Citroën	59
235902	Peugeot	139, 141, 147
235902 [6]		siehe Klappseite vorn • see fold in front.
235903	Citroën	59
235903	Peugeot	139, 141, 147
235906	Citroën	61, 63, 65, 67
235906	Fiat	79, 81
235906	Ford	81, 85, 87, 89
235906	Lancia	97, 99
235906	Peugeot	141, 143, 145, 149
235906 [6]		siehe Klappseite vorn • see fold in front.
235908	Citroën	63
235908	Jaguar	93
235908	Land Rover	99
235908	Peugeot	145
235908 [6]		siehe Klappseite vorn • see fold in front.
235910	Citroën	61
235910	Peugeot	143
235910 [6]		siehe Klappseite vorn • see fold in front.
235911	Citroën	61
235911	Peugeot	143
235920	Citroën	59, 63, 65, 69
235920	Ford	85
235920	Mazda	99
235920	Peugeot	137, 139, 141, 147
235920 [6]		siehe Klappseite vorn • see fold in front.
235921	Citroën	59, 63, 65, 69
235921	Ford	85
235921	Mazda	99
235921	Peugeot	137, 139, 141, 147
236500	Volvo	239, 241
236500 [6]		siehe Klappseite vorn • see fold in front.
236501	Volvo	239, 241
236600	Citroën	61, 63
236600	Fiat	81
236600	Ford	85, 87, 89
236600	Land Rover	99
236600	Peugeot	145, 147
236602	Citroën	61, 63
236602	Peugeot	141, 143, 145, 147, 149
236603	Citroën	61, 63
236603	Peugeot	141, 143, 145, 147, 149
236900	Lexus	99
236900	Toyota	181, 183
236901	Toyota	181, 183
236902	Toyota	181, 183
237400	Honda	91
237401	Honda	91
238000	Land Rover	99
238001	Land Rover	99
238001 [6]		siehe Klappseite vorn • see fold in front.
238400	Hyundai	91
238400	Kia	95
238401	Hyundai	91
238401	Kia	93, 95
238402	Hyundai	91
238403	Hyundai	91
238404	Hyundai	91
238600	Chrysler	57
238601	Chrysler	57
238604	Chrysler	57
238604	Dodge	71
238604	Jeep	93
238604 [6]		siehe Klappseite vorn • see fold in front.
238700	Smart (MCC)	179
238700 [6]		siehe Klappseite vorn • see fold in front.
238701	Smart (MCC)	179
239100	Ssangyong	179
245002	BMW	43, 47, 49, 51
245006	BMW	43, 45, 47, 55
245103	Mercedes-Benz	101
245104	Mercedes-Benz	101, 109, 111, 119
245104	Puch	151

RUVILLE
YOUR PARTNER

245106	Mercedes-Benz	101, 109
245106	Puch	151
245108	Mercedes-Benz	101, 107, 111, 113, 115
245110	Mercedes-Benz	103, 105, 107, 109, 111, 113, 115, 119
245110	Puch	151
245110 [6]		siehe Klappseite vorn • see fold in front.
245111	Mercedes-Benz	103, 105, 107, 109, 111, 113, 115, 119
245111	Puch	151
245111 [6]		siehe Klappseite vorn • see fold in front.
245112	Mercedes-Benz	103, 105, 107, 109, 111, 113, 115, 119
245112	Puch	151
245112 [6]		siehe Klappseite vorn • see fold in front.
245155	MAN	243
245155	Mercedes-Benz	243, 245
245230	Ford	87, 89
245230 [6]		siehe Klappseite vorn • see fold in front.
245231	Ford	87, 89
245231 [6]		siehe Klappseite vorn • see fold in front.
245232	Ford	89
245232 [6]		siehe Klappseite vorn • see fold in front.
245233	Ford	89
245233 [6]		siehe Klappseite vorn • see fold in front.
245404	Audi	35, 37
245404	Volkswagen	221, 233
245404 [6]		siehe Klappseite vorn • see fold in front.
245405	Audi	35, 37
245405	Volkswagen	221, 233
245405 [6]		siehe Klappseite vorn • see fold in front.
245406	Audi	31, 33, 35, 37
245406 [6]		siehe Klappseite vorn • see fold in front.
245407	Audi	31, 33, 35, 37
245407 [6]		siehe Klappseite vorn • see fold in front.
245535	Renault	151, 153, 157
245902	Citroën	57, 59, 65, 69
245902	Fiat	75, 77
245902	Peugeot	137, 139, 141, 145, 147, 149
245902 [6]		siehe Klappseite vorn • see fold in front.
246800	Nissan	123
246800 [6]		siehe Klappseite vorn • see fold in front.
246801	Nissan	123
246801 [6]		siehe Klappseite vorn • see fold in front.
246802	Nissan	123, 125
246802 [6]		siehe Klappseite vorn • see fold in front.
246803	Nissan	123, 125
246803 [6]		siehe Klappseite vorn • see fold in front.
255000 [4]		siehe Klappseite vorn • see fold in front.
255005	BMW	43, 47, 55
255010 [2]		siehe Klappseite vorn • see fold in front.
255011 [2]		siehe Klappseite vorn • see fold in front.
255012 [2]		siehe Klappseite vorn • see fold in front.
255013 [2]		siehe Klappseite vorn • see fold in front.
255108	Mercedes-Benz	101, 111
265001	BMW	49, 53, 55
265002	BMW	43, 45, 47, 49, 51, 53, 55
265002	Land Rover	99
265002	Opel	133
265002	Rover	157
265002	Vauxhall	193
265003	BMW	43, 45, 47, 49, 51, 53, 55
265004	BMW	49, 51, 53, 55
265005	BMW	43, 45, 47, 53, 55
265006	BMW	43, 45, 47, 49, 51, 53
265007	BMW	45, 47, 49, 53
265007	Opel	133
265007	Vauxhall	193
265008	Citroën	57, 59, 61, 63
265008	Mini	119, 121
265008	Peugeot	139, 141, 143, 147, 149
265009	Citroën	57, 59, 61, 63
265009	Mini	119, 121
265009	Peugeot	139, 141, 143, 147, 149
265010	BMW	45, 47, 49, 53, 55
265010	Porsche	151
265011	BMW	51, 53, 55
265012	BMW	47, 51
265020	BMW	43, 45, 53, 55
265077	BMW	43, 45, 47, 49, 51
265088	BMW	45, 55
265102	Mercedes-Benz	103, 105, 107, 109, 111, 113, 115, 119
265102	Puch	151
265103	Ford	87
265103	Land Rover	99
265103	Smart (MCC)	179
265104	Mercedes-Benz	103, 105, 107, 109, 111, 113, 115, 119
265104	Puch	151
265106	Mercedes-Benz	103, 119
265106	Smart (MCC)	179
265108	Mercedes-Benz	103, 107, 109, 111, 113, 115, 117
265109	Mercedes-Benz	103, 105, 109, 115, 117
265110	Mercedes-Benz	103, 107, 109, 111, 117
265113	Mercedes-Benz	101, 107, 109, 111, 113, 115, 119
265113	Puch	151
265115	Audi	35, 37
265115	Mercedes-Benz	101
265118	Mercedes-Benz	101, 103, 105, 107, 109, 111, 113, 117, 119
265118	Puch	151
265119	Mercedes-Benz	103, 111, 113, 115
265130		258
265131		258
265132		258
265133		258
265134		258
265140	Chrysler	57
265140	Jeep	93
265140	Mercedes-Benz	103, 105, 107, 109, 111, 113, 115, 117, 119
265150	Mercedes-Benz	101, 103, 105, 107, 109, 111, 113, 115, 117, 119
265150	Puch	151
265150	Ssangyong	179
265162	Mercedes-Benz	243, 245
265164	Mercedes-Benz	243, 245
265165	Audi	27, 29, 31
265165	Chrysler	57
265165	Citroën	57, 59, 61, 63, 65, 67, 69
265165	Fiat	73, 79, 81
265165	Ford	85
265165	Hyundai	91
265165	Jaguar	93
265165	Jeep	93
265165	Lancia	99
265165	Land Rover	99
265165	Mazda	99
265165	Mercedes-Benz	103, 105, 107, 109, 111, 113, 115, 117, 119
265165	Mitsubishi	121
265165	Nissan	123, 125
265165	Opel	137
265165	Peugeot	137, 139, 141, 143, 145, 147, 149
265165	Renault	153, 155, 157
265165	Seat	159, 171, 173, 175
265165	Smart (MCC)	179
265165	Ssangyong	179
265165	Suzuki	179
265165	Vauxhall	195
265165	Volkswagen	195, 197, 199, 205, 207, 211, 215, 219, 221, 233
265202	Ford	89
265203	Ford	85, 89
265205	Ford	83, 85, 87
265206	Ford	83, 89
265208	Ford	81, 83, 85, 87
265230	Ford	81, 83, 85, 87, 89, 91
265255	Ford USA	91
265272	Ford	85, 87, 89
265280	Ford	83, 85, 89
265281	Ford	85, 87, 89
265285	Ford	89
265285	Ford USA	91
265301	Opel	125, 127, 129, 131, 133, 135
265301	Vauxhall	185, 187, 189, 191, 193
265302	Lada	95
265302	Opel	125, 127, 129, 131, 133, 135, 137
265302	Saab	157, 159
265302	Vauxhall	185, 187, 189, 191, 193, 195
265306	Daewoo	69
265306	Opel	125, 127, 129, 131, 133, 135, 137
265306	Vauxhall	185, 187, 189, 191, 193, 195
265307	Opel	127, 129, 131, 133
265307	Vauxhall	187, 189, 191
265309	Daewoo	69, 71
265309	Saab	159
265312	Lada	95

265312	Opel	127, 129, 133, 135
265312	Vauxhall	187, 189, 193
265330	Alfa Romeo	17
265330	Opel	127, 131, 135, 137
265330	Saab	157, 159
265330	Suzuki	179
265330	Vauxhall	187, 191, 193, 195
265401	Audi	27
265401	Ford	87
265401	Seat	159
265401	Volkswagen	197, 199, 207, 213, 215, 219, 235
265402	Audi	27
265402	Seat	159, 161, 163, 165, 169, 171, 173
265402	Skoda	175, 177, 179
265402	Volkswagen	195, 197, 199, 205, 207, 209, 211, 213, 221, 223, 225, 227, 229, 233
265403	Audi	27, 29, 31, 33, 35
265403	Ford	87
265403	Seat	159, 161, 165, 169, 171, 175
265403	Skoda	175, 177, 179
265403	Volkswagen	197, 199, 207, 211, 213, 215, 219, 221, 225, 229, 231, 233, 235
265404	Audi	27, 29, 31, 33, 35, 37, 41
265404	Porsche	151
265404	Seat	159, 161, 167, 169, 171, 175
265404	Skoda	175, 177, 179
265404	Volkswagen	207, 209, 211, 213, 221, 227, 229, 233, 235
265416	Seat	161, 165, 167, 169
265416	Volkswagen	225
265426	Audi	19, 21, 23, 25, 27, 29, 33, 35, 39, 41
265426	Ford	87
265426	Seat	159, 161, 163, 165, 167, 169, 171, 173
265426	Skoda	175, 177
265426	Volkswagen	195, 197, 199, 201, 203, 205, 207, 209, 211, 213, 215, 217, 219, 223, 225, 227, 229, 231, 233, 235, 237
265426	Volvo	237, 239, 241
265426 [1]		siehe Klappseite vorn • see fold in front.
265427	Audi	21, 23, 25, 27, 29, 33, 37, 39, 41
265427	Seat	159, 161, 163, 165, 167, 169, 171, 173, 175
265427	Skoda	175, 177, 179
265427	Volkswagen	195, 197, 199, 203, 205, 207, 213, 215, 217, 219, 221, 223, 225, 229, 231, 233, 235, 237
265430	Audi	19, 21, 23, 25, 27, 39, 41
265430	Volkswagen	197, 199, 201, 209, 211, 213, 215, 217, 229, 231, 233
265430	Volvo	237
265430 [1]		siehe Klappseite vorn • see fold in front.
265501	Renault	151, 153, 157
265503	Dacia	69
265503	Nissan	123
265503	Opel	137
265503	Renault	153, 155, 157
265503	Vauxhall	195
265702	Audi	29, 31, 33, 35, 37
265702	Skoda	179
265702	Volkswagen	219, 221
265703	Audi	29, 31, 33, 37, 41, 43
265703	Ford	87
265703	Seat	159, 171, 173
265703	Skoda	177
265703	Volkswagen	195, 199, 207, 213, 215, 221, 231, 233, 235
265704	Audi	27, 29, 31, 33, 35, 37, 39, 43
265704	Seat	159, 161, 165, 167, 169, 171, 173
265704	Skoda	177, 179
265704	Volkswagen	195, 205, 215, 219, 221, 229, 231
265705	Audi	25, 27, 29, 31, 33, 35, 37, 39, 43
265705	Seat	159, 161, 165, 167, 169, 171, 173
265705	Skoda	177, 179
265705	Volkswagen	195, 205, 215, 219, 221, 229, 231
265707	Audi	27, 29, 31, 33, 35, 37, 41
265707	Seat	159, 165, 167, 171, 175
265707	Skoda	177, 179
265707	Volkswagen	199, 207, 209, 211, 215, 221, 229, 233
265716	Audi	37
265716	Renault	153, 155
265716	Volkswagen	221, 233
265801	Alfa Romeo	15, 17
265801	Fiat	71, 73, 75
265801	Lancia	95, 97
265802	Alfa Romeo	15, 17
265802	Autobianchi	43
265802	Fiat	71, 73, 75, 77, 79, 81
265802	Lancia	95, 97, 99
265802	Opel	127, 135, 137
265802	Saab	159
265802	Seat	167, 171, 173
265802	Suzuki	179
265802	Vauxhall	187, 193, 195
265802	Volvo	237
265804	Fiat	73, 77
265804 [5]		siehe Klappseite vorn • see fold in front.
265805	Alfa Romeo	15, 17
265805	Fiat	71, 73, 75, 77, 79
265805	Lancia	95, 97
265805	Rover	157
265806	Fiat	73, 77
265806 [5]		siehe Klappseite vorn • see fold in front.
265807	Fiat	71, 75, 77, 79
265807	Lancia	97, 99
265809	Alfa Romeo	15, 17
265809	Fiat	71, 73, 75, 77, 79
265809	Ford	87
265809	Lancia	97, 99
265809	Opel	125, 127, 129, 131, 133, 135, 137
265809	Saab	159
265809	Suzuki	179, 181
265809	Vauxhall	185, 187, 189, 191, 193, 195
265812	Alfa Romeo	17
265812	Fiat	71, 73, 75, 77, 79
265812	Lancia	97, 99
265814	Alfa Romeo	17
265815	Fiat	71, 75, 77, 79
265898	Alfa Romeo	15
265898	Citroën	57, 67, 69
265898	Fiat	73, 75, 77, 79, 81
265898	Lancia	97, 99
265898	Peugeot	137
265898	Rover	157
265901	Citroën	67
265901	Fiat	81
265901	Lancia	99
265901	Peugeot	145
265901	Renault	153, 155
265903	Citroën	61, 63, 65, 67, 69
265903	Fiat	79, 81
265903	Lancia	97, 99
265903	Peugeot	139, 141, 143, 145, 147
265904	Citroën	67
265904	Peugeot	137
265905	Citroën	61, 63, 67
265905	Fiat	81
265905	Lancia	97
265905	Peugeot	137, 145
265905	Renault	153, 155
265906	Citroën	67
265906	Peugeot	145
265907	Citroën	63, 65, 67
265907	Fiat	81
265907	Lancia	99
265907	Peugeot	145, 147
265907	Renault	151, 153, 155
265910	Citroën	57, 63, 65, 67, 69
265910	Fiat	73, 79, 81
265910	Peugeot	139, 141, 143, 145, 147, 149
265911	Citroën	61
265911	Peugeot	139, 141
265912	Citroën	57, 59, 69
265912	Peugeot	139, 141, 147, 149
265950	Citroën	63, 67, 69
265950	Peugeot	141, 143, 145
265960	Fiat	73, 79, 81
265970	Citroën	57, 63, 65, 67, 69
265970	Fiat	73, 81
265970	Lancia	99
265970	Peugeot	139, 141, 143, 145, 147, 149
266001	Alfa Romeo	15
266002	Alfa Romeo	17
266005	Alfa Romeo	15, 17
266005	Lancia	97

RUVILLE
YOUR PARTNER

266140	Land Rover	99
266401	Renault	155
266401	Rover	157
266401	Saab	159
266402	Saab	157, 159
266502	Volvo	237, 239, 241
266505	Renault	153, 155
266505	Volvo	237, 239, 241
266552	Hyundai	91
266552	Kia	93, 95
266552	Volvo	239, 241
266555	Volvo	239, 241
266600	Citroën	65
266600	Peugeot	147
266601	Citroën	61, 63
266601	Peugeot	141, 143, 145, 147, 149
266602	Citroën	61, 63
266602	Fiat	81
266602	Ford	85, 87, 89
266602	Land Rover	99
266602	Peugeot	145, 147
266703	Porsche	149
266705	Porsche	151
266710	Porsche	149
266715	Porsche	149
266801	Nissan	123, 125
266802	Nissan	123
266803	Nissan	121, 123
266804	Nissan	123
266807	Nissan	123, 125
266808	Nissan	123, 125
266809	Nissan	123, 125
266900	Toyota	181, 183
266901	Toyota	181, 183
266902	Toyota	183
266903	Toyota	181, 183
266904	Toyota	181, 183
266905	Toyota	183
266906	Toyota	183
266907	Toyota	181, 183
266908	Toyota	181, 183
266909	Lexus	99
266909	Toyota	181, 183
266911	Toyota	181, 183
267000	Mazda	99, 101
267001	Mazda	101
267002	Mazda	101
267005	Kia	93, 95
267200	Lada	95
267300	Mitsubishi	121
267302	Mitsubishi	121
267303	Mitsubishi	121
267400	Honda	91
268300	Daimler	71
268300	Jaguar	93
268400	Citroën	57, 59, 61, 63, 65, 69
268400	Fiat	79
268400	Ford	81, 85
268400	Hyundai	91
268400	Kia	95
268400	Mazda	99
268400	Mini	119, 121
268400	Peugeot	139, 141, 143, 145, 147, 149
268400	Ssangyong	179
268400	Volvo	239, 241
268534	MAN	243
268901	Kia	93
268902	Kia	93
268902	Porsche	149, 151
269600	Lexus	99
269600	Toyota	183
275307	Opel	125, 127, 129, 131, 133, 135
275307	Vauxhall	185, 187, 189, 191, 193
280021		258
280022		258
280024		258
280025		258
280026		258
280027		258
280028		258
280029		258
280030		258

280031		258
280032		258
280033		258
280035		258
280036		258
280037		258
280038		258
280039		258
280040		258
280041		258
280042		258
280043		258
280044		258
280045		258
280046		258
280047		258
280048		258
280049		258
280050		258
280051		258
280052		258
280053		258
280054		258
280055		258
285100		258
285101		258
285103		258
285104		258
285105		258
285106		258
285107		258
285108		258
285109		258
295005	BMW	43, 45, 47, 49
295201	Ford	83, 87
295202	Ford	85, 89
295218	Ford	81, 83, 85, 87, 89
295225	Ford	81, 87, 89
295244	Ford	89
295250	Ford	81, 83, 85, 87, 89
295310	Daewoo	69
295310	Lada	95
295310	Opel	125, 127, 129, 131, 133, 135, 137
295310	Vauxhall	185, 187, 189, 191, 193, 195
295310 [3]		siehe Klappseite vorn • see fold in front.
295340 [3]		siehe Klappseite vorn • see fold in front.
295401	Audi	27, 29, 31, 35, 43
295401	Ford	87
295401	Seat	159, 161, 165, 169, 171, 173, 175
295401	Skoda	175, 177, 179
295401	Volkswagen	195, 197, 205, 207, 213, 215, 219, 221, 223, 229, 231, 233
295402	Audi	27
295402	Seat	161, 163, 165, 169, 171, 173
295402	Skoda	175, 177
295402	Volkswagen	195, 197, 205, 213, 221, 223, 225, 229
295403	Seat	161, 163, 165, 167, 169, 171
295403	Skoda	175, 177
295403	Volkswagen	197, 203, 213, 221, 223, 225, 235
295404	Audi	19, 21, 23, 25, 27, 29, 33, 35, 37, 39, 41
295404	Ford	87
295404	Seat	159, 161, 163, 165, 167, 169, 171, 173
295404	Skoda	175, 177
295404	Volkswagen	197, 199, 201, 203, 205, 207, 209, 211, 213, 215, 217, 219, 221, 223, 225, 227, 229, 231, 233, 235, 237
295405	Audi	17, 19, 21, 23, 25, 27, 29, 31, 33, 35, 37, 39, 41, 43
295405	Ford	87
295405	Seat	159, 161, 163, 165, 167, 169, 171, 173, 175
295405	Skoda	175, 177
295405	Volkswagen	195, 197, 199, 201, 203, 205, 207, 209, 211, 213, 215, 217, 219, 221, 223, 225, 227, 229, 231, 233, 235, 237
295405	Volvo	237
295406	Audi	19, 21, 23, 25, 27, 29, 33, 35, 37, 39, 41
295406	Ford	87
295406	Seat	159, 161, 163, 165, 167, 169, 171, 173
295406	Skoda	175, 177

295406	Volkswagen	197, 199, 201, 203, 205, 207, 209, 211, 213, 215, 217, 219, 221, 223, 225, 227, 229, 231, 233, 235, 237
295501	Renault	153, 155
295801	Fiat	73, 75, 77, 79
295801	Lancia	97, 99
295901	Citroën	63, 67
295901	Peugeot	141, 145
295901	Renault	155
295902	Peugeot	137
295903	Citroën	57, 61, 63, 65, 67, 69
295903	Fiat	79
295903	Peugeot	139, 141, 143, 145, 147, 149
295907	Citroën	57, 63, 67, 69
295907	Fiat	81
295907	Lancia	99
295907	Peugeot	137, 141, 143, 145, 147, 149
295907	Rover	157
295912	Citroën	57, 59, 63, 65, 67, 69
295912	Fiat	73, 79, 81
295912	Lada	95
295912	Peugeot	139, 141, 143, 145, 147, 149
295912	Rover	157
295912	Talbot	181

KLASSIERTE ROLLENSCHLEPPHEBEL

FÜR BMW VALVETRONIC UND PSA PRINCE-MOTOREN

TECHNISCHE INFO NR. 1007

FAHRZEUGHERSTELLER:

BMW, Mini, Citroën, Peugeot

BETROFFENE ARTIKEL:

BMW:	PSA:	RUVILLE-Nr.:
11 33 7 559 792	0903.H3	235006
11 33 7 559 793	0903.H5	235007
11 33 7 559 794	0903.H6	235008
11 33 7 559 795	0903.H7	235009
11 33 7 559 796	0903.H8	235010

In den BMW Valvetronic 6-Zylinder-Ottomotoren und den PSA 4-Zylinder Prince-Motoren werden auf der Einlass- und (nur bei Prince-Motoren) der Auslassventilseite klassierte Schlepphebel verbaut. Es handelt sich um fünf unterschiedliche Schlepphebel, die jeweils mit einer Kennziffer (siehe Bild 2) beschriftet sind.

Aktuelle Fahrzeugzuordnungen finden Sie in unseren Katalogmedien.

WICHTIGER HINWEIS!
Der Austausch der Schlepphebel muss sortenrein durchgeführt werden. Angaben des Fahrzeugherstellers beachten!

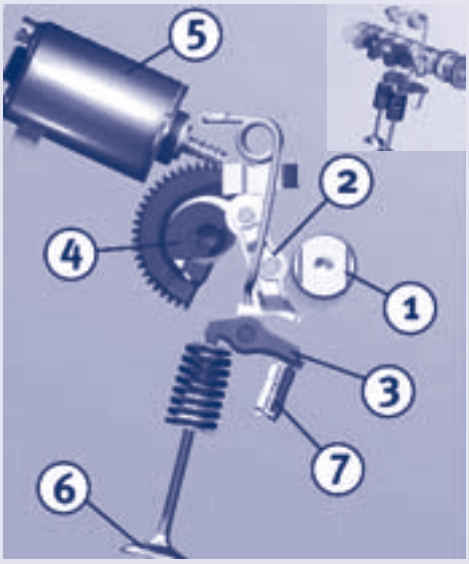

Bild 1: Systemübersicht BMW-Valvetronic / Detailansicht der Systemkomponenten

Bild 2: Beschriftung Rollenschlepphebel

Technischer Hintergrund für Valvetronic-Motoren (Bild 1):
Hier übernimmt das Einlassventil die Funktion der Drosselklappe und wird nicht direkt von der Nockenwelle (1) angetrieben, sondern über einen Zwischenhebel (2). Der Zwischenhebel (2), der ebenfalls klassiert ist, trägt in der Mitte eine Rolle, auf der der Nocken abläuft. Sein unteres Ende sitzt auf der Rolle des Schlepphebels (3) mit hydraulischem Ausgleichselement (7) auf.
Oben stützt sich der Hebel (2) über eine zweite Rolle an einer Exzenterwelle (4) ab. Der Zwischenhebel (2) überträgt die Drehung der Nocken, abhängig von der Stellung des Exzenters, auf das Ventil (6). Die variable Verstellung des Systems erfolgt durch die Verdrehung der Exzenterwelle (4) mittels Elektromotor (5), abhängig von Motordrehzahl und Stellung des Gaspedals. Bei den PSA Prince-Motoren entfällt die Zwischenhebelfunktion.

INFORMATION
Bitte beachten Sie das RUVILLE Nockenwellenprogramm.

EGON VON RUVILLE GmbH
Billbrookdeich 112 • 22113 Hamburg • Germany
Tel.: +49 (0)40 73344-0 • Fax: +49 (0)40 73344-199
info@ruville.de • www.ruville.de

RUVILLE YOUR PARTNER

Technische Änderungen vorbehalten. Copyright © 2010 EGON VON RUVILLE GmbH

1007/0.1/01.2010/PDF-D

Für weitere Sprachen siehe: www.ruville.de
For other languages please look: www.ruville.de

GRADED ROLLING CONTACT ROCKER ARMS

FOR BMW VALVETRONIC AND PSA PRINCE ENGINES

TECHNICAL INFO NO. 1007

VEHICLE MANUFACTURER:

BMW, Mini, Citroën, Peugeot

OE-NO.:/ITEM NO.:

BMW:	PSA:	RUVILLE-NO.:
11 33 7 559 792	0903.H3	235006
11 33 7 559 793	0903.H5	235007
11 33 7 559 794	0903.H6	235008
11 33 7 559 795	0903.H7	235009
11 33 7 559 796	0903.H8	235010

You can find current vehicle classifications in our catalogue.

In BMW Valvetronic 6-cylinder petrol engines and PSA 4-cylinder Prince engines, graded rocker arms are fitted on the intake valve side and (on Prince engines only) on the outlet valve side and are identified with a number referring to its size. We have five different rocker arms, each marked with a code (see Image 2).

IMPORTANT NOTE!
The rocker arm must be replaced with a genuine part. Note the specifications of the vehicle manufacturer!

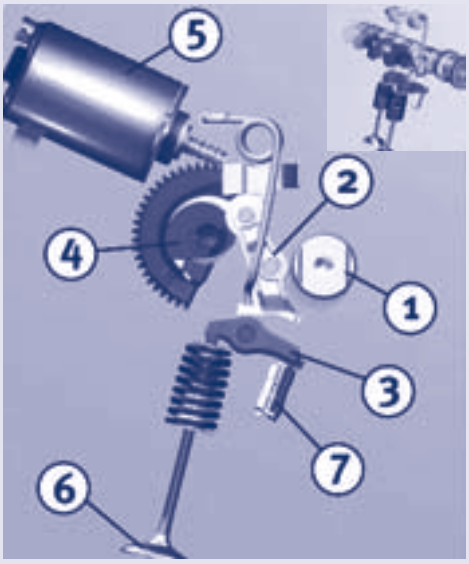

Image 1: System overview for BMW Valvetronic/ Detailed view of system components

Image 2: Rolling contact rocker arm marking

Technical background for Valvetronic engines (Image 1):
In this case the intake valve assumes the functions of the throttle valve and is not driven directly by the camshaft (1) but via an intermediate arm (2). Image 2: Rolling contact rocker arm marking. The intermediate arm (2), which is also classified, contains a rolling element in the centre on which the cams run. The lower end sits on the rolling element of the rocker arm (3) with hydraulic compensating element (7). At the top, the arm (2) is connected to an eccentric shaft (4) via a second rolling element. An electric motor (5) rotates the eccentric shaft (4) according to the driver's required load status. The intermediate arm (2) transfers the rotation of the cams to the valve (6), depending on the position of the eccentric element. Variable adjustment of the system is carried out on the basis of the engine speed and the position of the accelerator. With PSA Prince engines, the intermediate arm function is omitted.

INFORMATION
Please note the RUVILLE camshaft program.

EGON VON RUVILLE GmbH
Billbrookdeich 112 • 22113 Hamburg • Germany
Tel.: +49 (0)40 73344-0 • Fax: +49 (0)40 73344-199
info@ruville.de • www.ruville.de

RUVILLE YOUR PARTNER

Subject to change. Copyright © 2010 EGON VON RUVILLE GmbH

1007/0.1/01.2010/PDF-GB

Für weitere Sprachen siehe: www.ruville.de
For other languages please look: www.ruville.de

LINGUETS À GALET NUMÉROTÉS

POUR LES MOTEURS BMW VALVETRONIC ET PSA PRINCE

INFORMATION TECHNIQUE Nº 1007

CONSTRUCTEURS:

BMW, Mini, Citroën, Peugeot

RÉFÉRENCES OE/RÉFS.RUVILLE:

BMW:	PSA:	RUVILLE-Nº:
11 33 7 559 792	0903.H3	235006
11 33 7 559 793	0903.H5	235007
11 33 7 559 794	0903.H6	235008
11 33 7 559 795	0903.H7	235009
11 33 7 559 796	0903.H8	235010

Les applications véhicule/article sont disponiblesdans nos catalogues.

Des linguets numérotés sont montés sur les moteurs essence 6 cylindres Valvetronic de BMW et sur les moteurs 4 cylindres Prince de PSA, côté soupapes d'admission et (uniquement sur les moteurs Prince) côté soupapes d'échappement. Il s'agit de cinq linguets différents, qui sont chacun identifiés par un numéro d'identification (voir image 2).

REMARQUE IMPORTANTE:
Le remplacement des linguets doit s'effectuer en tenant compte des différents types. Respecter les indications du constructeur du véhicule!

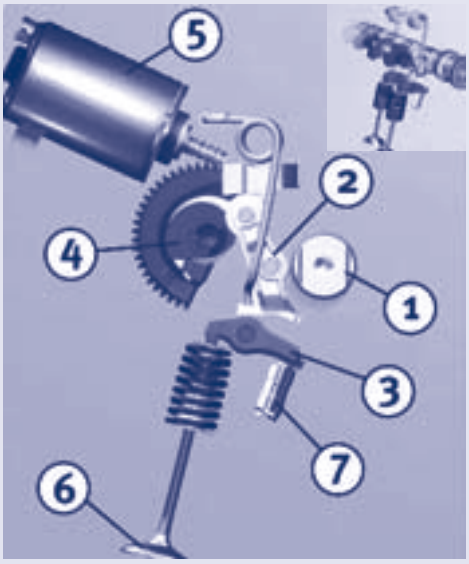

Image 1: vue d'ensemble du système du moteur Valvetronic de BMW/vue détaillée des composants du système

Image 2: inscription sur le linguet à galet

Contexte technique pour les moteurs Valvetronic (image 1) :
Dans le cas des moteurs Valvetronic, la soupape d'admission prend en charge la fonction du papillon et n'est pas directement entraînée par l'arbre à cames (1), mais par un levier intermédiaire (2). Image 2: inscription sur le linguet à galet Le levier intermédiaire (2), qui est également numéroté, est doté au centre d'un galet, lui même relié aux cames. Son extrémité inférieure repose sur le galet du linguet (3), qui comporte un élément de compensation hydraulique (7). Dans sa partie supérieure, le levier s'appuie (2) via un deuxième galet sur un arbre excentrique (4). Selon l'état de charge choisi par le conducteur, un moteurélectrique(5)faittournerl'arbreexcentrique(4).Le levier intermédiaire (2) transmet la rotation des cames, indépendamment de la position de l'excentrique, à la soupape (6). Le calage variable du système s'effectue en fonction du régime moteur et de la position de la pédale d'accélérateur. Sur les moteurs Prince de PSA, la fonction du levier intermédiaire n'est pas assurée.

INFORMATION
Veuillez bien noter la gamme Ruville d'arbres à cames et kits.

EGON VON RUVILLE GmbH
Billbrookdeich 112 • 22113 Hamburg • Germany
Tel.: +49 (0)40 73344-0 • Fax: +49 (0)40 73344-199
info@ruville.de • www.ruville.de

RUVILLE YOUR PARTNER

Sous réserve de modifications techniques. Copyright © 2010 EGON VON RUVILLE GmbH

1007/0.1/01.2010/PDF-F

Für weitere Sprachen siehe: www.ruville.de
For other languages please look: www.ruville.de

PALANCA OSCILANTE CON RODILLO CLASIFICADA

PARA LOS MOTORES BMW VALVETRONIC Y PSA PRINCE

INFORMACIÓN TÉCNICA Nº 1007

FABRICANTE:

BMW, Mini, Citroën, Peugeot

REFERENCIAS ORIGINALES/Nº DE ARTÍCULO:

BMW:	PSA:	RUVILLE-Nº:
11 33 7 559 792	0903.H3	235006
11 33 7 559 793	0903.H5	235007
11 33 7 559 794	0903.H6	235008
11 33 7 559 795	0903.H7	235009
11 33 7 559 796	0903.H8	235010

Las asignaciones actuales a los vehículos se encuentran en nuestros catálogos.

En los motores Otto de 6 cilindros BMW Valvetronic y en los PSA Prince de 4 cilindros, las palancas oscilantes clasificadas deben montarse en el lado de la válvula de salida y (sólo en motores Prince) en la válvula de entrada. Se trata de cinco palancas oscilantes diferentes con un número de identificación propio cada una (ver Fig. 2).

NOTA IMPORTANTE:
Las palancas oscilantes deben sustituirse de acuerdo con el tipo exacto.
¡Observar las indicaciones del fabricante del vehículo!

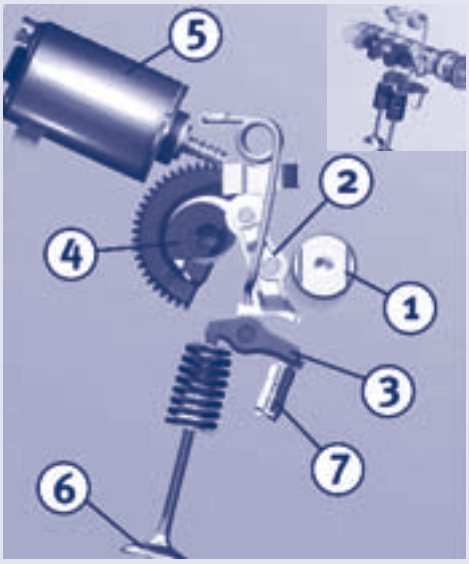

Fig. 1: Esquema del sistema BMW-Valvetronic / Esquema detallado de los componentes del sistema

Fig. 2: Inscripción en la palanca oscilante con rodillo

Trasfondo técnico en motores Valvetronic (Fig. 1):
En este caso, la válvula de entrada asume la función de la válvula de mariposa y no se acciona directamente mediante el árbol de levas (1) sino a través de una palanca intermedia (2). Fig. 2: Inscripción en la palanca oscilante con rodillo La palanca intermedia (2), también clasificada, cuenta con un rodillo situado en la parte central sobre el que actúa la leva. Su extremo inferior está asentado sobre el rodillo de la palanca oscilante (3) con el elemento de compensación hidráulico (7). Arriba, la palanca (2) se apoya con un segundo rodillo en un árbol con una excéntrica (4). Un motor eléctrico (5) gira el árbol de excéntrica (4) de acuerdo con el estado de carga deseado por el conductor. La palanca intermedia (2) transmite el giro de las levas a la válvula (6) según la posición de la excéntrica. La regulación variable del sistema se realiza según las rpm del motor y de la posición del pedal acelerador. En los motores PSA Prince, la función de la palanca intermedia se suprime.

INFORMACIÓN
Por favor tenga en cuenta el programa árbol de levas de RUVILLE.

EGON VON RUVILLE GmbH
Billbrookdeich 112 • 22113 Hamburg • Germany
Tel.: +49 (0)40 73344-0 • Fax: +49 (0)40 73344-199
info@ruville.de • www.ruville.de

RUVILLE YOUR PARTNER

Salvo modificationes Técnicas. Copyright © 2010 EGON VON RUVILLE GmbH

1007/0.1/01.2010/PDF-ESP

Für weitere Sprachen siehe: www.ruville.de
For other languages please look: www.ruville.de

BILANCIERI

PER MOTORI VALVETRONIC BMW E PRINCE PSA

INFORMAZIONI TECNICHE N. 1007

COSTRUTTORE VEICOLO:

BMW, Mini, Citroën, Peugeot

OE NUMERO/N. ART.:

BMW:	PSA:	RUVILLE-N.:
11 33 7 559 792	0903.H3	235006
11 33 7 559 793	0903.H5	235007
11 33 7 559 794	0903.H6	235008
11 33 7 559 795	0903.H7	235009
11 33 7 559 796	0903.H8	235010

L'attuale assegnazione ai veicoli è disponibile nei nostri cataloghi.

Nei motori Otto a 6 cilindri Valvetronic BMW e Prince PSA a 4 cilindri, sul lato valvola di aspirazione e (solo per i motori Prince) sul lato valvola di scarico vengono applicati bilancieri classificati. Si tratta di cinque diversi bilancieri, ognuno dotato di un numero di identificazione (vedere figura 2).

AVVERTENZA IMPORTANTE:
La sostituzione dei bilancieri deve essere eseguita in base al tipo. Osservare le indicazioni del costruttore del veicolo!

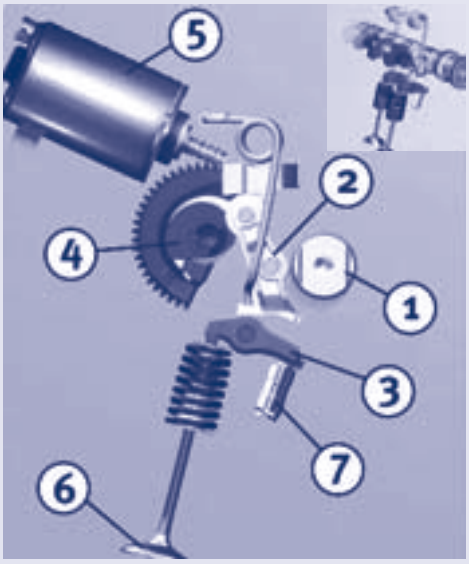

Figura 1: panoramica del sistema dei motori Valvetronic BMW / vista dettagliata dei componenti del sistema

Figura 2: scritta sui bilancieri a rulli

Informazioni tecniche per i motori Valvetronic (figura 1):
In questo caso, la valvola di aspirazione ricopre la funzione della valvola a farfalla e non viene azionata direttamente dall'albero a camme (1) ma tramite una leva intermedia (2). Figura 2: scritta sui bilancieri a rulli La leva intermedia (2), anch'essa classificata, supporta al centro un rullo che percorre la camma. La sua estremità inferiore poggia sul rullo dei bilancieri (3) con un elemento di compensazione idraulico (7). In alto, la leva (2) poggia, tramite un secondo rullo, su un albero a eccentrici (4). In base al carico del conducente, un motorino elettrico (5) ruota l'albero a eccentrici (4). La leva intermedia (2) trasmette la rotazione della camma, in base alla posizione dell'eccentrico, alla valvola (6). La regolazione variabile del sistema è in funzione del regime del motore e della posizione del pedale dell'acceleratore. Per i motori Prince PSA non è presente la funzione della leva intermedia.

INFORMAZIONE
Si prega di notare il programma albero a canne di RUVILLE.

EGON VON RUVILLE GmbH
Billbrookdeich 112 • 22113 Hamburg • Germany
Tel.: +49 (0)40 73344-0 • Fax: +49 (0)40 73344-199
info@ruville.de • www.ruville.de

RUVILLE YOUR PARTNER

Für weitere Sprachen siehe: www.ruville.de
For other languages please look: www.ruville.de

Con riserva di modifiche tecniche. Copyright © 2010 EGON VON RUVILLE GmbH

1007/0.1/01.2010/PDF-I

	GR	TR
04.98→	από χρονολογία	yapim / imal yili
→04.98	μέχρι χρονολογία	yapim / imal yilina kadar
+/-	με / χωρίς	ile / olmadan
...	αριθμός πλαισίου	Şasi no.
...→	από αριθμό πλαισίου	şasi no
→...	μέχρι αριθμό πλαισίου	şasi no. kadar
...	Κωδικός κινητήρα	Motor kodu
...→	Από αριθμό κινητήρα	motor-No.
→...	μέχρι αριθμό κινητήρα	motor no kadar
(A/C)	Κλιματισμού	Klima
(ALV)	για βαλβίδες εξαγωγής	valfleri egzoz
(A.T.)	πλήρως αυτόματο	Tam Otomatik
{AUS}	Αυστραλία	Avustralya
BM ...	Τύπος κατασκευής	yapi stili / tarzi
cm³	Κυβικό εκατοστό	Cc
{CZ}	Δημοκρατία Τσεχίας	Çek Cumhuriyeti
(ELV)	για βαλβίδες εισαγωγής	emme valfleri için
{GB}	Μεγ. Βρετανία	Büyük Britanya
(GS)	από την πλευρά του σαζμάν	Vites
G.T.: ...	Τύπος σαζμάν	Vites model
(H)	πίσω	arka
HY	υδραυλικός	hidrolik
i	προσέξτε οπωσδήποτε!	Unutulmaması gereken önemli
{J}	Ιαπωνία	Japonya
(K)	Στροφαλοφόρος άξονας	krank milleri
kA	κοντή έκδοση	kısa versiyonu
(KAT)	Καταλύτης	Katalizatör
kW	Κιλοβάτ	Kilowatt
(L)	αριστερά	sol
lA	μακρά έκδοση	uzun versiyonu
(L3), (L4)	Πρότυπο (standards) εκπομπής καυσαερίων : L3, L4	Emisyon standartlarına: L3, L4
ME	μηχανικό	mekanik olarak
(...-M.T.)	Χειροκίνητη μετάδοση ... Ταχύτητα (σχέση)	Mekanik şanzıman … vites
(M.T.)	Χειροκίνητη μετάδοση	Mekanik şanzıman
(N)	Εκκεντροφόρος άξονας	Eksantrik
P. ... →	Από αριθμό παραγωγής	Üretim numarasından itibaren
P.→ ...	μέχρι αριθμό παραγωγής	Üretim numarasına kadar
(R)	δεξιά	sağ
{S}	Σουηδία	Ýsveç
(ST)	στην μπροστινή πλευρά	ön
{USA}	ΗΠΑ	ABD
(V)	εμπρός	ön
VET. ... →	από αριθμό VET	VET numarası itibaren
VET.→ ...	μέχρι αριθμό VET	VET numarasından kadar
Vgl.-Nr. ...	για κωδικό OE (γνήσιο)	OE numarası
VP	μετάδοση - οδήγηση αντλίας κενού	Vakum pompası
(-ZAS)	για οχήματα χωρίς απενεργοποίηση κυλίνδρων	silindir devre dışı bırakılması araçlar icin
(Zyl. ...)	Τοποθέτηση στην πλευρά του κυλίνδρου X	uyum saglama silindir X
(Zyl.: 1-3)	Τοποθέτηση στην πλευρά του κυλίνδρου 1-3	uyum saylama silindir 1-3
(Zyl.: 4-6)	Τοποθέτηση στην πλευρά του κυλίνδρου 4-6	uyum saglama silindir 4-6

	CZ	H
04.98→	od ... roku vyroby	évjárattól
→04.98	do ... roku vyroby	évjáratig
+/-	s, se/bez	...val/... nélkűl
...	číslo podvozku	Alvázszám
...→	od čisla podvozku	alvázszámtól
→...	do čisla podvozku	alvázszámig
...	kód motoru	Motorkód/Motorfajta
...→	od čisla motoru	motorszámtól
→...	do čisla motoru	motorszámig
(A/C)	klimatizace	Légkondi
(ALV)	pro výfukové ventily	kipufogó szelepeknek
(A.T.)	plně automaticky	Teljesen automata
{AUS}	Austrálie	Ausztrália
BM ...	výrobní vzorek	Minta
cm³	kubický centimetr	Köbcentiméter
{CZ}	Èeská republika	Csehország
(ELV)	pro sací ventily	szívószelepeknek
{GB}	Velká Británie	Nagy-Britannia
(GS)	ze strany převodovky	váltóoldali
G.T.: ...	typ převodovky	Sebességváltó típus
(H)	zadní	hátsó
HY	hydraulické	hidraulikus
ⓘ	věnujte pozornost	Kűlőnős figyelemmel járjon el!
{J}	Japonsko	Japán
(K)	kliková hřídel	Főtengely
kA	krátké provedení	Rövid kivitel
(KAT)	katalyzátor	katalizátor
kW	kalendeářní týden	KW
(L)	levá	bal
lA	dlouhé provedení	Hosszú kivitel
(L3), (L4)	Emisní norma: L3, L4	Emissziós szabvány: L3, L4
ME	mechanický	mechanikus
(...-M.T.)	manuální převodovka...stupeň	... fokozatú kézi
(M.T.)	manuální převodovka	Kézikapcsolású váltó
(N)	Vačkový hřídel	Vezérműtengely
P. ... →	do výrobního čísla	Gyártási számtól
P.→ ...	od výrobního čísla	Gyártási számig
(R)	pravá	jobb
{S}	Svedsko	Svédország
(ST)	přední, vepředu	homlok oldali
{USA}	USA	USA
(V)	přední	elöl
VET. ... →	do čisla VET	VET számtól
VET.→ ...	od čisla VET	VET számig
Vgl.-Nr. ...	pro originální čísla	OE-számhoz
VP	Vývěva	hajtott részegydég: Vákuumszivattyú
(-ZAS)	pro vozidla s deaktivací válce	Járművek henger hatástalanítás nélkül
(Zyl. ...)	přiléhající k válci X	Telepítés oldal az X hengerhez
(Zyl.: 1-3)	přiléhající k válcům 1-3	Telepítés oldal az 1-3 hengerhez
(Zyl.: 4-6)	přiléhající k válcům 4-6	Telepítés oldal a 4-6 hengerhez

	RUS	PL
04.98→	начиная с года выпуска	od roku prod.
→04.98	до года выпуска	do roku prod.
+/-	с/без	z/bez
…	номера шасси	Numer podwozia
…→	начиная с номера шасси	od numeru podwozia
→…	до номера шасси	do numeru podwozia
…	номер двигателя	Kod silnika
…→	начиная с номера двигателя	od numeru silnika
→…	до номера двигателя	do numeru silnika
(A/C)	кондиционер	klimatyzacja
(ALV)	для выпускных клапанов	dla zaworów wydechowych
(A.T.)	автоматическая коробка передач	przekładnia automatyczna
{AUS}	Австралия	Australia
BM …	модель	Typ modelu
cm³	кубический сантиметр	centymetr sześcienny
{CZ}	Республика Чехия	Czechy
(ELV)	для впускных клапанов	dla zaworów ssących
{GB}	Великобритания	Wielka Brytania
(GS)	со стороны коробки передач	oprawa skrzyni biegów
G.T.: …	тип коробки передач	typ skrzyni biegów
(H)	сзади	z tyłu
HY	гидравлический	hydrauliczny
i	Обязательно обратить внимание!	koniecznie zwrócic uwage !
{J}	Япония	Japonia
(K)	коленчатый вал	Wał korbowy
kA	короткое исполнение	wykonanie krótkie
(KAT)	катализатор	katalizator
kW	кВт	kilowaty
(L)	слева	z lewej
lA	длинная конструкция	wykonanie długie
(L3), (L4)	норма выхлопа: L3, L4	Normy emisji: L3, L4
ME	механический	mechaniczne
(…-M.T.)	ручная коробка передач ...-ступенчатая	przekładnia mechaniczno .-biegowa
(M.T.)	механическая коробка передач	przekładnia mechaniczna
(N)	газо-распределительный вал	Wałek rozrządu
P. … →	начиная с производственного номера	od numeru seryjnego
P.→ …	до производственного номера	do numeru seryjnego
(R)	справа	z prawej
{S}	Швеция	Szwecja
(ST)	с лобовой стороны	od strony czołowej
{USA}	США	USA
(V)	спереди	z przodu
VET. … →	с VET-номера	od numeru VET
VET.→ …	до VET-номера	do numeru VET
Vgl.-Nr. …	для оригинального номера	dla numeru OE
VP	приводн. аггрегат: ваакумный насос	agregat napędzany: pompa podciśnieniowa
(-ZAS)	для автомобилей без отключения цилиндров	dla pojazdów bez …
(Zyl. …)	место монтажа к цилиндру X	Zamocowania na cylinder X
(Zyl.: 1-3)	место монтажа к цилиндру 1-3	Zamocowania na cylinder 1-3
(Zyl.: 4-6)	место монтажа к цилиндру 4-6	Zamocowania na cylinder 4-6

	E	I
04.98→	desde año construccción	Da anno
→04.98	hasta año de construcción	Fino a anno
+/-	con/sin	con/senza
...	nº de chasis	n° telaio
...→	desde nº de chasis	Da n° telaio
→...	hasta nº de chasis	fino a n° telaio
...	Código de motor	Codice motore
...→	desde nº de motor	Da n° motore
→...	hasta nº de motor	fino a n° motore
(A/C)	climatizador	condizionatore
(ALV)	para válvulas de escape	per valvole di scarico
(A.T.)	completamente automática	Cambio automatico
{AUS}	Australia	Australia
BM ...	Modelo de construcción	Modello
cm³	centímetro cúbico	cilindrata (cm3)
{CZ}	República Checa	Repubblica ceca
(ELV)	para válvulas de admisión	per le valvole di aspirazione
{GB}	Gran Bretaña	Gran Bretagna
(GS)	lado de engranaje	Sul lato del cambio
G.T.: ...	Tipo de caja de cambios	Tipo trasmissione
(H)	posterior	Posteriore
HY	hidráulico	idraulico
i	Considere absolutamente!	Si prega di prestare attenzione!
{J}	Japón	Giappone
(K)	Cigüeñal	Albero a gomiti
kA	Modelo corto	Versione corta
(KAT)	catalizador	marmitta catalitica
kW	kilovatio	kilowatt
(L)	izquierda	Sinistra
lA	Modelo largo	Versione lunga
(L3), (L4)	Norma de emisión: L3, L4	Standard di emissione: L3, L4
ME	mecánico	Meccanico
(...-M.T.)	Manual, ... vel.	Cambio manuale a ... marce
(M.T.)	Caja de cambios manual	Cambio manuale di velocità
(N)	Árbol de levas	Albero a camme
P. ... →	desde nº de producción	Da n° produzione
P.→ ...	hasta nº de producción	fino a n° produzione
(R)	derecha	Destra
{S}	Suecia	Svezia
(ST)	frontal	Parte frontale
{USA}	USA	USA
(V)	delante	Anteriore
VET. ... →	desde nº VET	Da n° VET
VET.→ ...	hasta nº VET	fino a N° VET
Vgl.-Nr. ...	para OE N°	Per N° OE
VP	Eqp. impulsado: bomba vacío	Aggr. condotti: Pompa a vuoto
(-ZAS)	para vehículos sin ...	per i veicoli con disattivazione del cilindro
(Zyl. ...)	Ajustar al cilindro X	Montaggio al cilindro X
(Zyl.: 1-3)	Ajustar al cilindro 1-3	Montaggio al cilindro 1-3
(Zyl.: 4-6)	Ajustar al cilindro 4-6	Montaggio al cilindro 4-6

	D	GB	F
04.98→	ab Baujahr	from model	à partir de l´année de construction
→04.98	bis Baujahr	up to model	jusqu'à l'année de construction
+/-	mit/ohne	with/without	avec/sans
...	Fahrgestell-Nr.	chassis no.	nº de châssis
...→	ab Fahrgestell-Nr.	from chassis no.	à partir du nº de châssis
→...	bis Fahrgestell-Nr.	to chassis no.	jusqu'au nº de châssis
...	Motorcode	Engine	Code moteur
...→	ab Motor-Nr.	from engine number	à partir du nº de moteur
→...	bis Motor-Nr.	up to engine no.	jusqu'au nº de moteur
(A/C)	Klimaanlage	air conditioning	climatisation
(ALV)	für Auslassventile	for exhaust valves	pour les soupapes d'échappement
(A.T.)	Vollautomatik	Fully Automatic System	boîte automatique
{AUS}	Australien	Australia	Australie
BM ...	Baumuster	Design	Modèle type
cm³	Kubikzentimeter	cubic centimeters	centimètre cube
{CZ}	Tschechische Republik	Czech Republic	République tchèque
(ELV)	für Einlassventile	for intake valves	pour les soupapes d'admission
{GB}	Groß Britannien	Great Britain	Grande-Bretagne
(GS)	Getriebeseitig	Transmission side	du côté boîte de vitesses
G.T.: ...	Getriebetyp	Transmission Type	Type de boîte de vitesses
(H)	hinten	rear	arrière
HY	hydraulisch	hydraulic	hydraulique
i	Unbedingt beachten!	Please pay attention!	À considérer absolument!
{J}	Japan	Japan	Japon
(K)	Kurbelwelle	crankshaft	vilebrequin
kA	kurze Ausführung	Short Version	Version courte
(KAT)	Katalysator	catalytic converter	pot catalytique
kW	Kilowatt	kilowatt	kilowatt
(L)	links	left	à gauche
lA	lange Ausführung	Long Version	Version longue
(L3), (L4)	Abgasnorm: L3, L4	exhaust emission standard: L3, L4	Norme d'émission: L3, L4
ME	mechanisch	mechanical	mécanique
(...-M.T.)	Schaltgetriebe ... Gang	...-speed manual transmission	boîte de vitesses man. à ... vit.
(M.T.)	Schaltgetriebe	Manual transmission	boîte de vitesses manuelle
(N)	Nockenwelle	camshaft	arbre (m) à cames
P. ... →	ab Produktions-Nr.	from production number	à partir du nº de production
P.→ ...	bis Produktions-Nr.	up to production number	jusqu'au nº de production
(R)	rechts	right	à droite
{S}	Schweden	Sweden	Suède
(ST)	stirnseitig	frontal (on the face side)	côté frontal
{USA}	USA	USA	USA
(V)	vorne	front	avant
VET. ... →	ab VET-Nummer	from VET number	à partir du numéro VET
VET.→ ...	bis VET-Nummer	up to VET number	jusqu'au numéro VET
Vgl.-Nr. ...	für OE-Nummer	for OE number	pour les numéros des pièces d'origine
VP	angetr. Agg.: Vakuumpumpe	driven unit: vacuum pump	Pompe à vide
(-ZAS)	für Fahrzeuge ohne Zylinderabschaltung	for vehicles without cylinder cut-off	pour véhicules sans arrêt cylindrique
(Zyl. ...)	Einbauseite zum Zylinder X	Fitting side to the cylinder X	Montage côté cylindre X
(Zyl.: 1-3)	Einbauseite zum Zylinder 1-3	Fitting side to the cylinder 1-3	Montage côté cylindre 1-3
(Zyl.: 4-6)	Einbauseite zum Zylinder 4-6	Fitting side to the cylinder 4-6	Montage côté cylindre 4-6

INFORMATION & KNOW-HOW

RUVILLE CD-ROM / TecDoc & TecCom / Partslife

Die RUVILLE Komplettprogramme auf CD-ROM
The RUVILLE Complete-Programmes on CD-ROM

Elektronischer Automobilteile-Katalog Datenlieferant
Electronic automotive parts catalogue Data supplier

Die Kommunikations-Plattform im Automotive Aftermarket
The communication platform for the Automotive Aftermarket

Das Entsorgungskonzept für den KFZ-Teilekreislauf
The disposal concept to recycle automotive parts

D

Dieser Katalog ist ausschließlich für den gewerblichen Bereich bestimmt. Die Angaben in diesem Katalog sind sorgfältig bearbeitet, Änderungen vorbehalten. Ersatzansprüche aufgrund von Druckfehlern oder anderen fehlerhaften und/oder unvollständigen Angaben sind ausgeschlossen, wir haften nur bei Vorsatz und grober Fahrlässigkeit, im letzteren Fall begrenzt auf den üblicherweise und typischerweise in derartigen Fällen voraussehbaren Schaden. Soweit wir Bezug nehmen auf die Ersatzteilnummern der Fahrzeughersteller, dient dies ausschließlich zu Vergleichszwecken. Eine Verwendung derartiger Angaben in Rechnungen an den Fahrzeugbesitzer ist nicht statthaft. Nachdruck, auch auszugsweise, ist nur mit unserer ausdrücklichen vorherigen schriftlichen Zustimmung gestattet.

GB

This catalogue is solely intended for commercial use. All details in this catalogue have been prepared with the utmost care. They are subject to alteration without previous notification. Compensation claims due to printing errors or other faulty and/or incomplete details are herewith excluded. We are only liable for damage caused intentionally or by gross negligence. In the latter event compensation is limited to the customary and typical foreseeable damage for such cases. In so far as we refer to spare part numbers of vehicle manufacturers, then this is purely for comparative purposes. The use of such details in invoices to vehicle owners is impermissible. Reprints, even of excerpts, are only permissible with our previous explicit written approval.

F

Ce catalogue est destiné exclusivement au secteur commercial. Les indications qui y sont mentionnées ont été traitées avec soin. Sous réserve de modifications. Tous dommages-intérêts en raison d'erreur d'impression ou d'autres indications erronées et/ou incomplètes sont exclus. Nous sommes responsables uniquement en cas de préméditation et de négligence ; en ce qui concerne ce dernier point, notre responsabilité est limitée aux dommages couramment et typiquement prévisibles dans de tels cas. Dans la mesure où nous nous référons aux numéros de pièces détachées de constructeurs automobile, ceci a lieu uniquement à titre de comparaison. L'emploi de telles indications dans les factures remises aux propriétaires de véhicules n'est pas permis. Toute reproduction, même partielle, est autorisée uniquement après notre accord exprès par écrit.

E

Este catálogo va destinado exclusivamente al sector industrial. Las indicaciones contenidas en este catálogo han sido elaboradas cuidadosamente. Reservada cualquier modificación. Se excluyen derechos a indemnización debido a errores de imprenta o a otras indicaciones incorrectas y/o incompletas; nosotros solamente asumimos la responsabilidad en caso de dolo o culpa grave, en el último caso limitado a los daños normal y habitualmente previsibles en tales casos. En tanto que nosotros nos refiramos a los números de piezas de recambio, esto sirve exclusivamente para fines comparativos. No está permitido utilizar tales informaciones en facturas destinadas al propietario del vehículo. La reproducción, también en extracto, solamente está permitida con nuestro consentimiento previo por escrito.

I

Questo catalogo è destinato esclusivamente al settore commerciale. Le indicazioni in questo catalogo sono elaborate accuratamente, con riserva di modifiche. Sono esclusi diritti al riscarcimento del danno a causa di errori di stampa o per altre indicazioni errate e/o incomplete. Siamo responsabili soltanto in caso di dolo e di colpa grave, nell'ultimo caso limitato al danno prevedibile solitamente e tipicamente in casi simili. Per quanto facciamo riferimento al numero delle parti di ricambio dei fabbricanti del veicolo, questo serve esclusivamente a scopi di paragone. Non è ammesso un impiego di tali indicazioni nelle fatture al proprietario del veicolo. La ristampa, anche parziale, è ammessa soltanto con il ns. previo consenso espresso per iscritto.

RUS

Настоящий каталог предназначается исключительно для субъектов предпринимательства. Информация, содержащаяся в данном каталоге, прошла тщательную обработку. Изменения возможны. Претензии по замене, возникшие вследствие опечаток, а также иных искажений и/или неполноты информации, исключены; мы принимаем ответственность только в случае преднамеренных действий, приведших к дефекту, или грубой халатности. В последнем случае, ответственность ограничивается дефектами, являющимися обычными и типичными для аналогичных случаев. Любые наши ссылки на номера деталей и производителя транспортного средства делаются исключительно для целей сравнения. Указание этой информации в счетах, выставляемых владельцу транспортного средства, не допускается. Перепечатка, в том числе и частичная, разрешается только при наличии нашего однозначно сформулированного предварительного согласия, совершенного в письменной форме.

PL

Katalog ten przeznaczony jest wyłącznie do celów przemysłowych. Informacje w nim zawarte zostały bardzo starannie opracowane. Zastrzega się możliwość zmian. Roszczenia odszkodowawcze z powodu błędów drukarskich lub innych błędnych i/czy niekompletnych danych są wykluczone, odpowiadamy w przypadku działania umyślnego oraz dużych zaniedbań, w ostatnim przypadku ogranicza się to dającej się zwyczajowo i zwyczajnie przewidzieć szkody w tego typu przypadkach. Części zamienne producenta pojazdów służą wyłącznie do celów porównawczych. Nie zezwala się na wykorzystywanie tego rodzaju danych w rachunkach przekazywanych właścicielowi pojazdu. Na przedruk, również częściowy zezwala się po uzyskaniu naszej wyraźnej uprzedniej akceptacji na piśmie.

CZ

Tento katalog je určen výhradně pro průmyslovou oblast. Údaje obsažené v tomto katalogu jsou zpracovány s velkerou péčí. Změny jsou vyhrazeny. Nároky na náhradu škody na základě tiskových chyb nebo jiných chybných a/nebo neúplných údajů jsou vyloučeny, ručíme jen v případě škod způsobených úmyslně nebo v důsledku hrubé nedbalosti, v posledně jmenovaném případě s omezením na škody, které lze v případech takového druhu obvykle předpokládat. Pokud zohledňujeme čísla náhradních dílů podle výrobce vozidla, uvádíme je výhradně pro účely srovnání. Použití těchto údajů ve vyúčtování pro majitele vozidla není přípustné. Reprodukce tohoto katalogu nebo jeho části je dovolena jen s naším předchozím výslovným písemným souhlasem.

H

E katalógus kizárólag ipari használatra készült. Adatai gondos kidolgozás eredményei. A változtatás jogát fenntartjuk. Nyomdai hibából, vagy más hibás és/vagy nem teljes adatból eredően kártalanítási igény nem támaszthatók, szavatosságot csak szándékosságból, vagy durva hanyagságból eredő, az utóbbi esetben szokásosan és jellemzően ilyen esetben előre látható károkra korlátozva vállalunk. Amikor a járműgyár alkatrész-számára hivatkozunk, az kizárólag összehasonlítási célt szolgál. Ilyen adatok felhasználása a jármű tulajdonosának adott számlákban nem megengedhető. Utánnyomás kivonatosan is csak kifejezett előzetes írásbeli hozzájárulásunkkal lehetséges.

Vertriebsnachweis:
EGON VON RUVILLE GmbH • Postfach 74 02 27 • 22092 Hamburg • Billbrookdeich 112 • 22113 Hamburg • Phone.: +49 (0)40 73344-0 • Fax: +49 (0)40 73344-199

EGON VON RUVILLE GmbH
Billbrookdeich 112 • 22113 Hamburg • Germany
Phone: +49 (0)40 73344-0 • Fax: +49 (0)40 73344-199
info@ruville.de • www.ruville.de

PERFORMING OE QUALITY
GERMAN KNOW-HOW
ENGINEERED WORLDWIDE

74/007 R423/5.0/8.2010/SCH-M